SASY 60i busbar system provides highest efficiency in the control panel

Productcatalogue 2018

Powering Business Worldwide

Energizing a world that demands more.

We deliver:

- **Electrical solutions** that use less energy, improve power reliability and make the places we live and work safer and more comfortable
- **Hydraulic and electrical solutions** that enable machines to deliver more productivity without wasting power
- **Aerospace solutions** that make aircraft lighter, safer and less costly to operate, and help airports operate more efficiently
- **Vehicle drivetrain and powertrain solutions** that deliver more power to cars, trucks and buses, while reducing fuel consumption and emissions

Discover today's Eaton.

Powering business worldwide

As a global power management company, we help customers worldwide manage the power needed for buildings, aircraft, trucks, cars, machinery and businesses.

Eaton's innovative technologies help customers manage electrical, hydraulic and mechanical power more reliably, efficiently, safely and sustainably.

We provide integrated solutions that help make energy, in all its forms, more practical and accessible.

With 2017 sales $120.4 billion, Eaton has approximately 96.000 employees around the world and sells products in more than 175 countries.

Eaton.com

EATON
Powering Business Worldwide

Customer-focused and Innovative SASY 60i - now a UL-certified Component

SASY 60i - safe and reliable: In combination with the new generation of Eaton's motor protectors and circuit breakers, SASY 60i provides a universal UL-certified solution for switching, protecting and distributing power.

The modular SASY 60i busbar system by Eaton has been conceived for the efficient distribution of power in the switching cabinet. Thanks to busbar adapters, feed and output switches can be mounted directly onto the busbar system in a quick and a space-saving way.

Optimized busbar profile

The system offers many advantages. For example, the SASY 60i uses double-T-profile bars, thus reducing the time and effort needed to prepare the contact points. The profile uses very few busbar supports for very high rated peak withstand currents (Ipk); it thus optimally utilizes the limited cabinet volume. In addition, dissipated heat is conducted in the best possible manner thanks to the large surface area of the busbar profile. Thanks to the market-conforming 60 mm center-to-center distance between the busbars, the system is compatible to other set-up components such as bus-mounting fuse bases or NH fuse switch disconnectors or the new D0-load disconnector switch using the D02-LTS/63/3-R type of fuse.

The latter provides for all-pole switching of the load (quick break) independent from manual switching, and safe fuse replacement in a voltage-free status. The device comes as standard with a flashing signal and contact position indicator, which either inform the user about a faulty fuse or show the switching status 0 or I of the device. The plug-type technology without fuse carriers (fuse plug) not only reduces the dissipated heat of the protective device while it is in operation, but also enables the user to replace a hot fuse after tripping without having to touch it with his hands. D02-LTS/63/3-R is available as a 3-pole and 4-pole version and it is extremely space-saving thanks to its overall width of 27 mm only. Retention springs making it easy to insert type D01 and cylindrical size 10x38 fuses in the fuse plugs are included in the scope of delivery. The load disconnector switch can of course be locked out and sealed.

Sammelschienen-System SASY 60i für den Weltmarkt

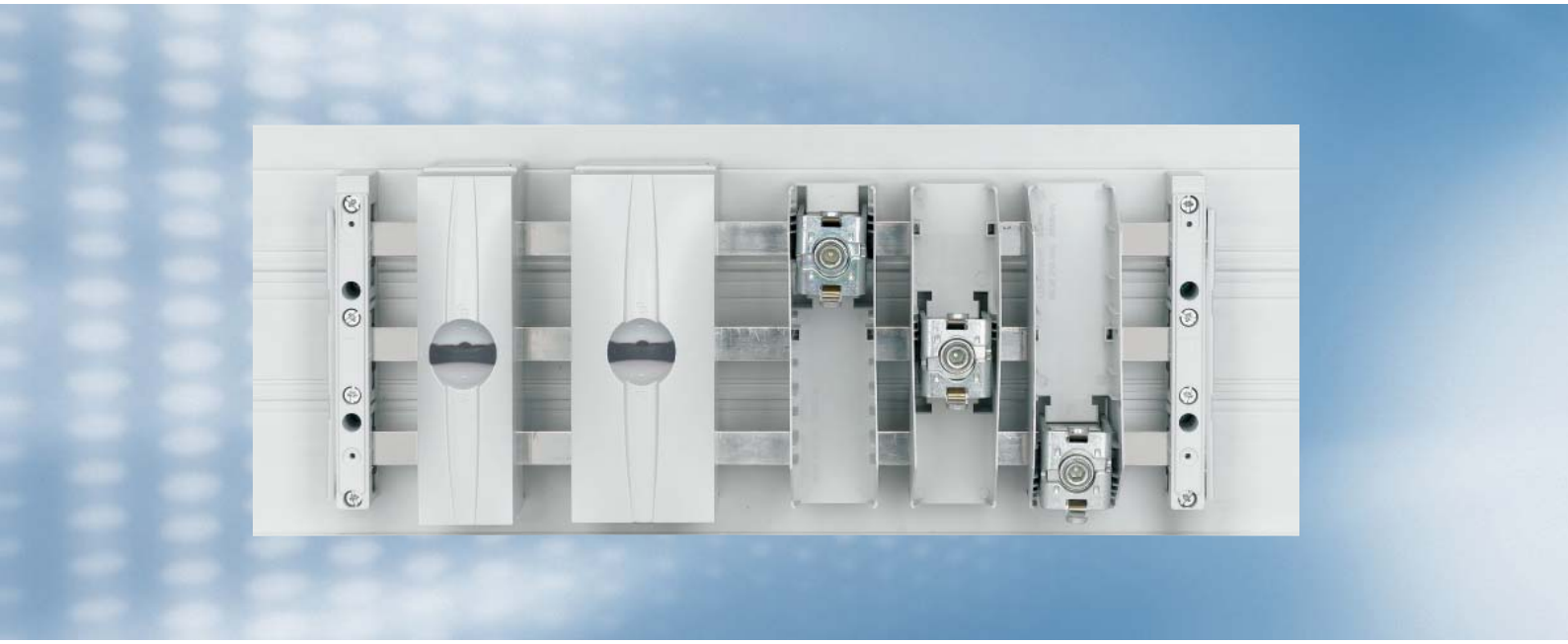

Short installation time thanks to pre-assembly

Eaton offers direct and reversing starters up to 15 kW, fully mounted on busbar adapters. These fully assembled units consist of one PKZM0 motor protector and one or two DILM contactor(s). In order to mount these, they only need to be clicked in place on the busbar; this guarantees reduced assembly times and costs.

Special features of the device adapters

The device adapters offer a special functionality in that they can be mounted onto different profiles and busbar thicknesses. The adapters connect to the motor protector and circuit breaker directly over the busbars, comfortably and without requiring any boreholes, up to 630 A.

By reducing the width of the adapter to 45 mm, it has been possible to match it to the width of the motor protectors and contactors. The actual mounting surface on the busbar system is thus optimized, helping to save room in the switching cabinet.

Safety is always first priority

Safety for people and for the system is the most important factor with all our developments. Here, this prerequisite has been met with a comfortable connection on the rear side. It allows for a safe connection from the circuit breakers to the busbar adapters. In addition, mounting times are significantly reduced. Modular system covers guarantee optimized shock protection all around, and thus the highest possible level of safety.

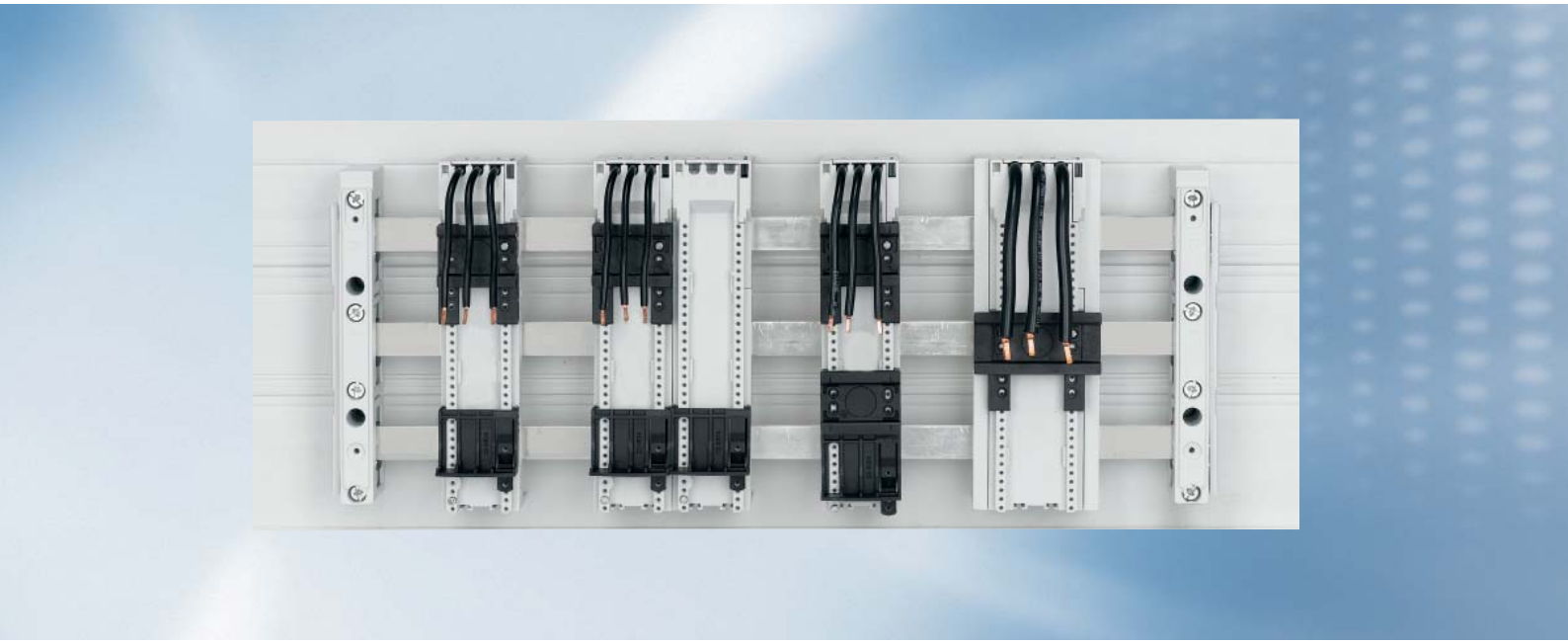

A system designed for worldwide use

Together with its system components, the SASY 60i busbar system is designed for worldwide use in control cabinets for mechanical and system engineering. Its design has even taken into account the greater clearance and creepage distances that must be observed in the U.S. pursuant to UL 508A.

For busbar applications that have not been type-tested, UL508A allows an ampacity of 1000A/inch2 (1.55A/mm2). This value may be higher if the product or the application has been tested accordingly. Eaton has conducted extensive tests for the user's maximum benefit in using SASY 60i busbar systems. The advantage of such tests is that one can use busbar systems designed for higher rated currents than the default value allows. SASY 60i components and combinations are listed under File No. E300273 and E140305UL.

Since SASY 60i requires fewer system components, the need to stock parts and to place orders is diminished with the new Eaton busbar system.

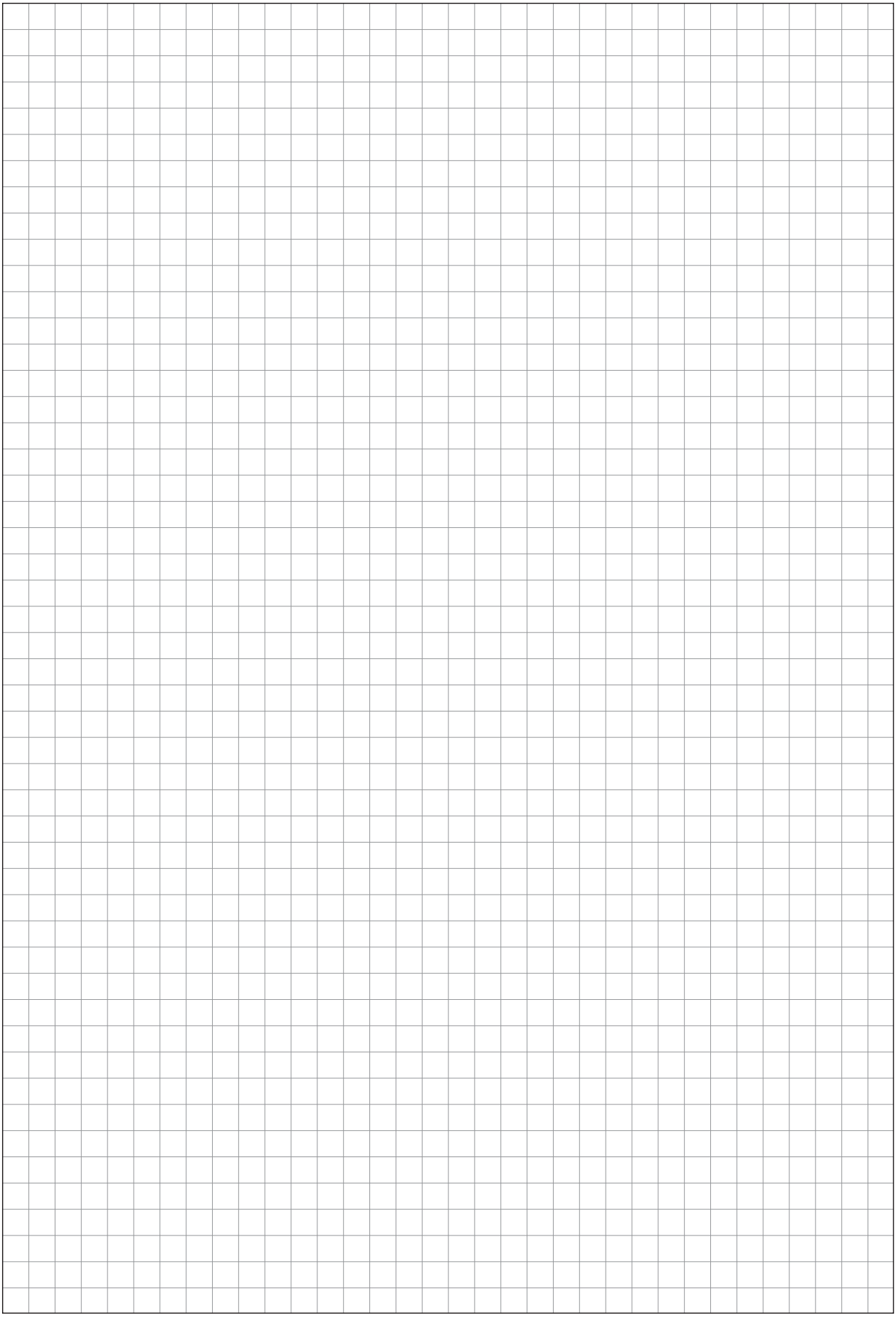

wa_vt01412

SASY 60i Busbar System

Systems up to 630 A for Flat Busbars ..... Page xx
Systems up to 1250, 1600 A for Profile Bars ..... Page xx
Covers for 630, 1250 and 1600 A Systems ..... Page xx
Feeder Circuit Adapters for 630, 1250 and 1600 A Systems ..... Page xx
Terminals for 630, 1250 and 1600 A Systems ..... Page xx
Lengthwise Bar Connections for 630, 1250 and 1600 A Systems ..... Page xx
Sammelschienenadapter als Einzelgeräte ..... Page xx
Sammelschienenadapter als Komplettgeräte ..... Page xx
Fuse Switch Disconnectors XNH ..... Page xx
Fuse Switch Disconnectors LTS, FC, NH-SLS ..... Page xx
Lammelliertes Copperband ..... Page xx
Line Supports ..... Page xx

wa_vt01412

Description

- Selected components are also conforming with UL-standards for control systems
- 60 mm spacing between busbars
- 630, 1250 and 1600 A rated current
- Adapter technology for Switch Disconnectors
- Adapter technology for Motor Starters
- Slide fuse equipment
- Connection technique

Poles Number	Max. Rated Operational Current I_e (A)	Special Features	Utilisation	Notes	Type Designation	Article No.	Units per package

Systems up to 630 A for Flat Busbars

Busbar Support

- Thermoplasticic, silicone-free, chlorine-free
- Halogen-free
- Self-extinguishing according to UL 94
- RAL 7035
- Track resistance CTI 200
- Temperature-resistant up to 120 °C

IEC Busbar Support

wa_vt09913

3	630	With snap-in slide for adapting to the respective size of the bar	12 x 5/10 15 x 5/10 20 x 5/10 25 x 5/10 30 x 5/10	With pre-drilled holes inside for screw-fixing	BBS-3/FL	107066	10

01063535_0

4	630	With snap-in slide for adapting to the respective size of the bar	12 x 5/10 15 x 5/10 20 x 5/10 25 x 5/10 30 x 5/10	With pre-drilled holes inside for screw-fixing	BBS-4/FL	138381	10

UL Busbar Support

wa_vt10013

3	630	With snap-in slide for adapting to the respective size of the bar	12 x 5/10 20 x 5/10 30 x 5/10	With pre-drilled holes inside for screw-fixing	BBS-3/FL-NA	107067	10

If used in feeder circuits according to UL 508A up to 600 V, it is necessary use the BBC-BT-NA base plate in addition.

PE/N Busbar Support

wa_vt10213

2	630	With snap-in slide for adapting to the respective size of the bar	12 x 5/10 15 x 5/10 20 x 5/10 25 x 5/10 30 x 5/10	Can be mounted individually	BBS-2/FL	107069	10

wa_vt11713

1	630	With snap-in slide for adapting to the respective size of the bar	12 x 5/10 20 x 5/10 30 x 5/10	Can be mounted individually	BBS-1/FL	107161	10

Compact Busbar Support

VT35310, VT35410

3	630	With a removable contact block to adjust it to the respective size of the bar	12 x 5/10	With pre-drilled holes inside for screw-fixing and integrated end covers	BBS-3/FL-C	138370	10

SASY 60i Busbar System

Systems up to 630 A for Flat Busbars

End Cover

wa_vt10413

Poles Number	Max. Rated Operational Current I_e (A)	Special Features	Utilisation	Notes	Type Designation	Article No.	Units per package
–	–	–	To cover the busbar ends for BBS-3/FL and BBS-3/FL-NA	–	ES-BBS-3/FL	107068	10

UL Base Plate

- Silicone-free, chlorine-free
- Self-extinguishing according to UL 94
- Temperature-resistant up to 110 °C

wa_vt13713

Poles Number	Max. Rated Operational Current I_e (A)	Special Features	Utilisation	Notes	Type Designation	Article No.	Units per package
–	–	To be used when the air gap between fully equipped busbar systems and mounting plate is insufficient	Necessary for UL support BBS-3/FL-NA	1100 mm long	BBC-BT-NA	107172	2

Busbar Covers

- Silicone-free, chlorine-free
- Self-extinguishing according to UL 94
- Temperature-resistant up to 110 °C

wa_vt13613

Poles Number	Max. Rated Operational Current I_e (A)	Special Features	Utilisation	Notes	Type Designation	Article No.	Units per package
–	–	–	12 x 5 15 x 5 20 x 5 25 x 5 30 x 5	12-30 x 5 1000 mm long	BBC-FL5	107173	10

wa_vt13313

Poles Number	Max. Rated Operational Current I_e (A)	Special Features	Utilisation	Notes	Type Designation	Article No.	Units per package
–	–	–	12 x 5 15 x 5 20 x 5 25 x 5 30 x 5	12-30 x 10 1000 mm long	BBC-FL10	107174	10

Flat Copper Rails

wa_vt00408

wa_vt00308

Max. Rated Operational Current I_e (A)	Dimension (mm x mm)	Length (mm)	Notes	Type Designation	Article No.	Units per package
160	12 x 5	1500	tinned	CU12X5	034121	10
		2250	tinned	CU12X5-2250	005093	10
250	20 x 5	1500	tinned	CU20X5	044092	10
		2250	tinned	CU20X5-2250	007466	10
460	20 x 10	1500	tinned	CU20X10	041719	10
		2250	tinned	CU20X10-2250	009839	10
630	30 x 10	1500	untreated	CU30X10	051211	10

Systems up to 1250, 1600 A for Profile Bars

Busbar Support

- Thermoplasticic, silicone-free, chlorine-free
- Halogen-free
- Self-extinguishing according to UL 94
- RAL 7035
- Track resistance CTI 200
- Temperature-resistant up to 120 °C

Busbar Support Double-T-Profile

	Poles Number	Max. Rated Operational Current I_e (A)	Special Features	Utilisation	Notes	Type Designation	Article No.	Units per package
wa_vt10113	3	1600	Suitable as lateral and central support	Double-T-Profile	With pre-drilled holes inside for screw-fixing	BBS-3/PR	107162	3
VT19814	1	1600	Suitable for setting up a PE or N bar	Double-T-Profile	With pre-drilled holes inside for screw-fixing	BBS-1/PR	107165	10

End Cover

wa_vt10313	–	–	–	For the BBS-3/PR support	–	ES-BBS-3/PR	107164	4

UL Base Plate

- Silicone-free, chlorine-free
- Self-extinguishing according to UL 94
- Temperature-resistant up to 110 °C

wa_vt13713	–	–	To be used when the air gap between fully equipped busbar systems and mounting plate is insufficient	Necessary for UL support BBS-3/FL-NA	1100 mm long	BBC-BT-NA	107172	2

Double-T-Profile Busbar

wa_vt13113	–	1250[1)]	Tin-plated Cross-section 500 mm²	For BBS-3/PR and BBS-1/PR supports	2400 mm long	CU-BAR-500/T	107166	1
wa_vt13013	–	1600[1)]	Tin-plated Cross-section 720 mm²	For BBS-3/PR and BBS-1/PR supports	2400 mm long	CU-BAR-720/T	107167	1

[1)] At a busbar temperature of 87.5 °C and an ambient temperature of 35 °C, please refer to the current load diagram in the Technical Data section for further values.

SASY 60i Busbar System

Systems up to 1250, 1600 A for Profile Bars

Poles Number	Max. Rated Operational Current I_e (A)	Special Features	Utilisation	Notes	Type Designation	Article No.	Units per package
Busbar Covers							
• Silicone-free, chlorine-free • Self-extinguishing according to UL 94 • Temperature-resistant up to 110 °C							
–	–	–	For Double-T-Profile	1000 mm long	BBC-CU-BAR/PR	107175	5

wa_vt13413

	Utilisation	Notes	Type Designation	Article No.	Units per package
	Covers for 630, 1250 and 1600 A Systems				
	Spare Section Cover - Modular				
wa_vt13213	To cover the front of the 60 mm system	700 mm long. To be used with BBC-MRCOV1 support only	BBC-RCOV1	107178	2
	Support for Spare Section Cover				
wa_vt11613	Suits any thickness of bars	To be used with spare section cover BBC-RCOV1 only	BBC-MRCOV1	107179	10
	Cover complete				
wa_vt09613	For 3-pole systems	228 mm long	BBC-CS1	107209	1
01063500_0	For 3-pole systems	270 mm long	BBC-CS3	138377	1
01063507_0	For 4-pole systems	228 mm long	BBC-CS4	138387	1
	Single covers				
	Compartment Section Double-T				
wa_vt12913	For 3-pole systems with BBS-3/PR	48 mm high 2400 mm long To be fixed at the (profile) bar support	BBC-CS48/PR	107176	1
wa_vt12813	For 3-pole systems with BBS-3/PR	76 mm high 2400 mm long To be fixed at the (profile) bar support	BBC-CS76/PR	107177	1
	Front Plate Cover for front plate cut-out				
SG13506	Cover module for cut-out. Height = 195 mm	54 mm width	AM-195/54	107963	15

SASY 60i Busbar System

Covers for 630, 1250 and 1600 A Systems

Utilisation	Notes	Type Designation	Article No.	Units per package

System Cover - Kit

- Silicone-free, chlorine-free
- Self-extinguishing according to UL 94
- Temperature-resistant up to 120 °C

For 3-pole systems

wa_vt09613

Cover Profile Front	1100 mm long	BBC-CS2-F	107180	1
Cover Profile Top/Bottom	1100 mm long	BBC-CS2-T/B	107181	2
Support Set for Cover Profile	1 set includes a right and left side support	BBC-MCS2	107182	1

For 4-pole systems

wa_vt09613

Cover Profile Front	1100 mm long	BBC-CS4-F	138384	1
Cover Profile Top/Bottom	1100 mm long	BBC-CS4-T/B	138383	2
Support Set for Cover Profile	1 set includes a right and left side support	BBC-MCS4	138382	1

System Cover - Compact

Empty-section Cover, Modular

- To cover the front of the Compact System
- For use with BBC-MRCOV3-C only

01063528_0

–	700 mm long	BBC-RCOV3-C	138371	2

Support for Spare Section Cover

- Suitable for 5 and 10 mm bar thickness
- For use with BBC-RCOV3-C only

VT35710

–	12 x 5/10	BBC-MRCOV3-C	138372	10

	Poles Number	Max. Rated Operational Current I_e (A)	Type of Conductor[1]	Utilisation	Notes	Type Designation	Article No.	Units per package
Feeder Circuit Adapters for 630, 1250 and 1600 A Systems								
Connecting Terminal Plates								
wa_vt15113	3	80	1.5 - 16 mm² AWG 16 - AWG 6 ◎ ◎	12x5/10 15x5/10 20x5/10 25x5/10 30x5/10 Double-T-Profile	20 mm width. With spring-type terminal technology.	BBA-TP3/16	107205	1
wa_vt09813	3	300	6 - 50 mm² AWG 10 - AWG 2/0 ◎ ◎ ▤ 6x9x0.8	12x5/10 15x5/10 20x5/10 25x5/10 30x5/10 Double-T-Profile	54 mm width. Terminals can be removed for connecting non-cut conductors. Looping them through is possible. Termination space 10 x 15 mm.	BBA-TP3/50	107183	1
wa_vt09713	3	440	35 - 120 mm² AWG 2 - MCM 250 ◎ ◎ ▤ 10x16x0.8	12x5/10 15x5/10 20x5/10 25x5/10 30x5/10 Double-T-Profile	81 mm width. Terminals can be removed for connecting non-cut conductors. Looping them through is possible. Termination space 15 x 15 mm.	BBA-TP3/120	107184	1
Connecting Terminal Plates Compact								
01063465_0	3	480	35 - 150 mm² AWG 2 - MCM 300 ◎ ◎ ▤ 10x20x1	12x5/10	90 mm width. Terminals can be removed for connecting non-cut conductors. Contacting is provided for through the cable bed. Compact System.	BBA-TP3/100-C	138373	1

1) ○ Round conductor, single-wired
◎ Round conductor, fine-wired with expertly pressed wire end ferrule
◎ Round conductor, multi-wired
◇ Sector conductor, single-wired
◈ Sector conductor, multi-wired
▤ Cu-Band
■ Cu-Bar

SASY 60i Busbar System

Feeder Circuit Adapters for 630, 1250 and 1600 A Systems

	Poles Number	Max. Rated Operational Current I_e (A)	Type of Conductor[1]	Utilisation	Notes	Type Designation	Article No.	Units per package
Connecting Set with Cover 3-pole • Silicone-free, chlorine-free • Self-extinguishing according to UL 94 • Track resistance CTI 200 • Temperature-resistant up to 120 °C								
wa_vt13513 wa_vt09613 	3	560	95 - 300 mm² MCM300 - MCM600 directly terminated: ◌ ◌ ◇	20x5/10 25x5/10 30x5/10 Double-T-Profile	180 - 240 mm width. Clearance between poles can be adjusted as required. To be fixed directly on top of the busbar terminal. Incl. cover cap in flexible width. Looping them through is possible.	BBA-TP3/300	107185	1
wa_vt13513 wa_vt09613 	3	800	Up to ▤ 10x32x1 ■ 30x25	20x5/10 25x5/10 30x5/10 Double-T-Profile	180 - 240 mm width. Clearance between poles can be adjusted as required. To be fixed directly on top of the busbar terminal. Incl. cover cap in flexible width. Looping them through is possible. Termination space 32 x 25 mm.	BBA-TP3/CU-BAND	107186	1
wa_vt61313 wa_vt09613 	3	1600	Up to ▤ (2x)10x50x1 Up to ■ (2x)50x10	30x10 Double-T-Profile	228 mm width. Co-ordinated up for Eaton NZM4. To be fixed directly on top of the busbar terminal. Incl. cover cap in flexible width. Looping them through is possible. Termination space 5 x 28 mm.	BBA-TP3/1000	107207	1

1) ◯ Round conductor, single-wired
◌ Round conductor, fine-wired with expertly pressed wire end ferrule
◌ Round conductor, multi-wired
◇ Sector conductor, single-wired
◇ Sector conductor, multi-wired
▤ Cu-Band
■ Cu-Bar

Poles Number	Max. Rated Operational Current I_e (A)	Type of Conductor[1]	Utilisation	Notes	Type Designation	Article No.	Units per package

Connecting Set with Cover 4-pole

- Silicone-free, chlorine-free
- Self-extinguishing according to UL 94
- Track resistance CTI 200
- Temperature-resistant up to 120 °C

wa_vt13513

wa_vt09613

4	560	95 - 300 mm² MCM300 - MCM600 directly terminated: ◎ ⁘ ◇	20x5/10 25x5/10 30x5/10 Double-T-Profile	180 - 240 mm width. Clearance between poles can be adjusted as required. To be fixed directly on top of the busbar terminal. Incl. cover cap in flexible width. Looping them through is possible.	BBA-TP4/300	138385	1

wa_vt13513

wa_vt09613

4	800	Up to ▤ 10x32x1 ■ 30x25	20x5/10 25x5/10 30x5/10 Double-T-Profile	180 - 240 mm width. Clearance between poles can be adjusted as required. To be fixed directly on top of the busbar terminal. Incl. cover cap in flexible width. Looping them through is possible. Termination space 32 x 25 mm.	BBA-TP4/CU-BAND	138386	1

1) ○ Round conductor, single-wired
◎ Round conductor, fine-wired with expertly pressed wire end ferrule
⁘ Round conductor, multi-wired
◇ Sector conductor, single-wired
◈ Sector conductor, multi-wired
▤ Cu-Band
■ Cu-Bar

SASY 60i Busbar System

Terminals for 630, 1250 and 1600 A Systems

Terminals for 630, 1250 and 1600 A Systems

Brace Terminals

- Connection method to busbars without drilling

	Max. Rated Operational Current I_e (A)	Type of Conductor[1]	Special Features	Utilisation	Notes	Type Designation	Article No.	Units per package
VT35910	480	38 - 150 mm², AWG2/0 - MCM300. directly terminated: ⊛ ⁘ ◈	Connection method to busbars without drilling	12x5/10 20x5/10	Contacting of wire and busbar via a cable bed	AKS150	138374	6
VT13306	500	95 - 185 mm², AWG3/0 - MCM350. directly terminated: ⊛ ⁘ ◈	Connection method to busbars without drilling	20x5/10 25x5/10 30x5/10 Double-T-Profile	Contacting of wire and busbar via a cable bed	AKS185	107195	6
VT13406	600	95 - 300 mm², MCM300 - MCM600. directly terminated: ⊛ ⁘ ◈	Connection method to busbars without drilling	20x5/10 25x5/10 30x5/10 Double-T-Profile	Contacting of wire and busbar via a cable bed	AKS300	107196	6
VT13206	800	▤ 3x20x1 to 2x(10x32x1) ■ 32x25	Connection method to busbars without drilling Termination space 32 x 25 mm.	20x5/10 25x5/10 30x5/10 Double-T-Profile	Contacting of wire and busbar via a contacting block	AKS-CU-BAND	107197	3
wa_vt61313	1600	Up to ▤ (2x)10x50x1 Up to ■ (2x)50x10	Connection method to busbars without drilling Termination space 55 x 28 mm.	20x5/10 25x5/10 30x5/10 Double-T-Profile	Contacting of wire and busbar via a contacting block	AKS1000	107208	1
01063437_0	1600	Up to ■ (2x)60x10	Connection method to busbars without drilling Termination space 68 x 28 mm.	30x10 Double-T-Profile Triple-T-Profile	Contacting of wire and busbar via a contacting block	AKS1200	138375	3
01063444_0	1600	Up to ■ (2x)100x10	Connection method to busbars without drilling Termination space 105 x 28 mm.	30x10 Double-T-Profile Triple-T-Profile	Contacting of wire and busbar via a contacting block	AKS2000	138376	3

1) ◯ Round conductor, single-wired
⊛ Round conductor, fine-wired with expertly pressed wire end ferrule
⁘ Round conductor, multi-wired
◇ Sector conductor, single-wired
◈ Sector conductor, multi-wired
▤ Cu-Band
■ Cu-Bar

	Max. Rated Operational Current I_e (A)	Type of Conductor[1]	Special Features	Utilisation	Notes	Type Designation	Article No.	Units per package
Profile Terminals[2]								
• Connection method to busbars without drilling • In case of parallel connection of two multi-layer copper bars, please place spacers in bet								
01063395_0	1600	750 mm², Termination space 51 x 5-28 ■ ▤	Connection method to busbars without drilling	Double-T-Profile	Width 82 mm	AKP750	138364	3
wa_vt12413	1600	800 mm², Termination space 41 x 20-42 ■ ▤	Connection method to busbars without drilling	Double-T-Profile	Width 72 mm	AKP800	107198	3
01063402_0	1600	900 mm², Termination space 64 x 5-28 ■ ▤	Connection method to busbars without drilling	Double-T-Profile	Width 94 mm	AKP900	138365	3
wa_vt12313	1600	1000 mm², Termination space 51 x 20-42 ■ ▤	Connection method to busbars without drilling	Double-T-Profile	Width 94 mm	AKP1000	107199	3
01063409_0	2000	1200 mm², Termination space 64 x 20-42 ■ ▤	Connection method to busbars without drilling	Double-T-Profile	Width 94 mm	AKP1200	138366	3
01063416_0	2500	1600 mm², Termination space 81 x 20-42 ■ ▤	Connection method to busbars without drilling	Double-T-Profile	Width 112 mm	AKP1600	138367	3
01063430_0	3200	3600 mm², Termination space 101 x 23-45 ■ ▤	Connection method to busbars without drilling	Triple-T-Profile	Width 132 mm	AKP3600	138369	3

1) ◯ Round conductor, single-wired
⊛ Round conductor, fine-wired with expertly pressed wire end ferrule
⁘ Round conductor, multi-wired
◇ Sector conductor, single-wired
◈ Sector conductor, multi-wired
▤ Cu-Band
■ Cu-Bar

2) Für UL508A-System with Profilklemme ist die Utilisation der UL Base Plate BBC-BT-NA and Sammelschienenabdeckung BBC-CU-BAR/PR erforderlich.

SASY 60i Busbar System

Terminals for 630, 1250 and 1600 A Systems

	Max. Rated Operational Current I_e (A)	Type of Conductor[1]	Special Features	Utilisation	Notes	Type Designation	Article No.	Units per package
	Universal Conductor Terminal 5 mm							
VT18406	180	1.5 - 16 mm², AWG14 - AWG6. directly terminated: 8x6x0.5	With integrated retaining spring, captive terminal screw, opened termination space 7.5 x 7.5 mm	All flat busbars of a thickness of 5 mm	–	AKU16/5	107187	100
VT18306	270	4 - 35 mm², AWG10 - AWG2. directly terminated: 3x9x0.8 or 6x9x0.8	With integrated retaining spring, captive terminal screw, opened termination space 10.5 x 11 mm	All flat busbars of a thickness of 5 mm	–	AKU35/5	107188	50
VT18206	400	16 - 70 mm², AWG4 - AWG2/0. directly terminated: 2x(3x9x0.8) or 6x9x0.8	With integrated retaining spring, captive terminal screw, opened termination space 14 x 14 mm	All flat busbars of a thickness of 5 mm	–	AKU70/5	107189	25
VT18106	440	16 - 120 mm², AWG4 - MCM250. directly terminated: 4x16x0.8 or 6x16x0.8 or 10x16x0.8	With integrated retaining spring, captive terminal screw, opened termination space 17 x 15 mm	All flat busbars of a thickness of 5 mm	–	AKU120/5	107190	25

1) Round conductor, single-wired
Round conductor, fine-wired with expertly pressed wire end ferrule
Round conductor, multi-wired
Sector conductor, single-wired
Sector conductor, multi-wired
Cu-Band
Cu-Bar

	Max. Rated Operational Current I_e (A)	Type of Conductor[1]	Special Features	Utilisation	Notes	Type Designation	Article No.	Units per package
Universal Conductor Terminal 10 mm								
VT13806	180	1.5 - 16 mm², AWG14 - AWG6. directly terminated: ⊛ ○ ⁘ ▤ 8x6x0.5	With integrated retaining spring, captive terminal screw, opened termination space 7.5 x 7.5 mm	All flat busbars of a thickness of 10 mm	–	AKU16/10	107191	100
VT13706	270	4 - 35 mm², AWG10 - AWG2. directly terminated: ⊛ ○ ⁘ ▤ 3x9x0.8 or 6x9x0.8	With integrated retaining spring, captive terminal screw, opened termination space 10.5 x 11 mm	All flat busbars of a thickness of 10 mm	–	AKU35/10	107192	50
VT13606	400	16 - 70 mm², AWG4 - AWG2/0. directly terminated: ⊛ ⁘ ▤ 2x(3x9x0.8) or 6x9x0.8	With integrated retaining spring, captive terminal screw, opened termination space 14 x 14 mm	All flat busbars of a thickness of 10 mm	–	AKU70/10	107193	25
VT13506	440	16 - 120 mm², AWG4 - MCM250. directly terminated: ⊛ ⁘ ▤ 4x16x0.8 or 6x16x0.8 or 10x16x0.8	With integrated retaining spring, captive terminal screw, opened termination space 17 x 15 mm	All flat busbars of a thickness of 10 mm	–	AKU120/10	107194	25
01063451_0	490	Cable lug M8	With integrated retaining spring, captive terminal screw, opened termination space, bolt M8x8	All flat busbars of a thickness of 10 mm, Double-T-Profile	–	AKU-M8/10	138362	20
01063458_0	630	Cable lug M10	With integrated retaining spring, captive terminal screw, opened termination space, bolt M10x10	All flat busbars of a thickness of 10 mm, Double-T-Profile	–	AKU-M10/10	138361	6

1) ○ Round conductor, single-wired
⊛ Round conductor, fine-wired with expertly pressed wire end ferrule
⁘ Round conductor, multi-wired
◇ Sector conductor, single-wired
◈ Sector conductor, multi-wired
▤ Cu-Band
■ Cu-Bar

SASY 60i Busbar System

Terminals for 630, 1250 and 1600 A Systems

	Max. Rated Operational Current I_e (A)	Type of Conductor[1]	Special Features	Utilisation	Notes	Type Designation	Article No.	Units per package
Brace Terminals								
01063605_0	630	–	Width 50 mm	All flat busbars of a thickness of 10 mm and CU-BAND11x21x1	–	PK900	138378	3
Connection Terminals								
01063388_0	630	95 - 300 mm²	Width 48 mm. Contacting of wire and busbar via a cable bed.	30 x 10 mm Double-T-Profile Triple-T-Profile	–	AK300	138336	3

1) ◯ Round conductor, single-wired
◯ Round conductor, fine-wired with expertly pressed wire end ferrule
◯ Round conductor, multi-wired
◇ Sector conductor, single-wired
◇ Sector conductor, multi-wired
▤ Cu-Band
■ Cu-Bar

Lengthwise Bar Connections for 630, 1250 and 1600 A Systems

Busbar Connecting Terminals

- For drill-free connection of identical types of busbars

	Max. Rated Operational Current I_e (A)	Width mm	Special Features	Utilisation	Notes	Type Designation	Article No.	Units per package
wa_vt27113	630	38	For identically shaped, flat copper bars	12 x 5/10 15 x 5/10 20 x 5/10	Spacing between systems 100 - 110 mm. Max. permissible mis-alignment of bars is 1 mm	BBT-CU12-20X5/10-38	138379	12
wa_vt12513	630	150	For identically shaped, flat copper bars	12 x 5/10 15 x 5/10 20 x 5/10	Spacing between systems 100 - 110 mm. Max. permissible mis-alignment of bars is 1 mm	BBT-CU12-20X5/10-150	107200	3
01063549_0	630	40	For identically shaped, flat copper bars	20 x 5/10 25 x 5/10 30 x 5/10	Spacing between systems 50 - 60 mm. Max. permissible mis-alignment of bars is 5 mm	BBT-CU20-30X5/10-40	138380	6
wa_vt12113	630	95	For identically shaped, flat copper bars	20 x 5/10 25 x 5/10 30 x 5/10	Spacing between systems 50 - 60 mm. Max. permissible mis-alignment of bars is 5 mm	BBT-CU20-30X5/10-95	107201	3
wa_vt12013	630	150	For identically shaped, flat copper bars	20 x 5/10 25 x 5/10 30 x 5/10	Spacing between systems 100 - 110 mm. Max. permissible mis-alignment of bars is 5 mm	BBT-CU20-30X5/10-150	107202	3
wa_vt11913	1600	50	For different and identical types of double-T-profile bars	Double-T-Profile	Spacing between systems 9 - 20 mm. Max. permissible mis-alignment of bars is 2 mm	BBT-CU-BAR500/720-50	107203	6
wa_vt11813	1600	150	For different and identical types of double-T-profile bars	Double-T-Profile	Spacing between systems 100 - 110 mm. Max. permissible mis-alignment of bars is 5 mm	BBT-CU-BAR500/720-150	107204	3

SASY 60i Busbar System

NZM Busbar Adapter, 3-pole

	Max. Rated Operational Current I_e (A)	Rated Operational Voltage U_e (V)	Adapter Width (mm)	Adapter Length (mm)	Special Features	Utilisation	Notes	Type Designation	Article No.	Units per package
NZM Busbar Adapter, 3-pole										
Busbar Adapter NZM										
• For use on flat copper bars 12 - 30 x 5/10, Double-T-Profiles and Triple-T-Profiles • Self-extinguishing according to UL 94 • Track resistance CTI 200 • Temperature-resistant up to 120 °C										
1230PIC-668 AO	160	690	92	200	For connecting to the system at the top or bottom through fixed connection bars included in the scope of delivery[1) 2)]	NZM1 PN1 N1 NS1	For switches with standard connection frame-type terminals. To be snapped onto the busbar by means of a combi-base.	NZM1-XAD160	104554	1
wa_vt12213	250	690	106	190	For connecting to the system at the top/bottom through a tube-type of connection at the rear. Tube included in the scope of delivery.[3)]	NZM2 PN2 N2 NS2	Use only in combination with auxiliary type (+)NZM2-XKR4 To be screwed tonto the busbar by means of a claw-type of clamp.	NZM2-XAD250	104555	1
wa_vt22513, wa_vt12213	630	690	140	300	For connecting to the system at the top/bottom through a tube-type of connection at the rear. Tube included in the scope of delivery.[3)]	NZM3 PN3 N3	Use only in combination with auxiliary type (+)NZM3-XKR13 To be screwed tonto the busbar by means of a claw-type of clamp.	NZM3-XAD630	107206	1
Terminal for Device Adadpter NZM										
wa_vt12713	250	690	–	–	To cover the connection to the system at the top/bottom	NZM2 PN2 N2 NS2	For device combination NZM2 use with auxiliary type +NZM2-XKR4O or +NZM2-XKR4U	NZM2-XKR4	281666	1
wa_vt12613	630	690	–	–	To cover the connection to the system at the top/bottom	NZM3 PN3 N3	For device combination NZM3 use with auxiliary type +NZM3-XKR13O or +NZM3-XKR13U	NZM3-XKR13	281668	1

[1)] To be snapped onto the voltage-free busbar.
[2)] Thanks to the combi-base it can be adjusted to a bar width of both 5 and 10 mm.
[3)] To be screwed onto the voltage-free busbar.

Max. Rated Operational Current I_e (A)	Rated Operational Voltage U_e (V)	Adapter Width (mm)	Adapter Length (mm)	Special Features	Utilisation	Notes	Type Designation	Article No.	Units per package

NZM Busbar Adapter, 4-pole

Busbar Adapter NZM

- For use on flat copper bars 12 - 30 x 5/10, Double-T-Profiles and Triple-T-Profiles
- Self-extinguishing according to UL 94
- Track resistance CTI 200
- Temperature-resistant up to 120 °C

01063591_0

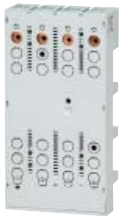

250	690	140	–	For connecting to the system at the top through a tubetype of connection at the rear. Tube included in the scope of delivery.[3]	NZM2(-4) PN2(-4) N2(-4) NS2(-4)	Use only in combination with auxiliary type (+)NZM2-4-XKR4 To be screwed tonto the busbar by means of a claw-type of clamp.	NZM2-4-XAD250	138388	1

01063598_0

630	690	185	–	For connecting to the system at the top through a tubetype of connection at the rear. Tube included in the scope of delivery.[3]	NZM3(-4) PN3(-4) N3(-4) NS3(-4)	Use only in combination with auxiliary type (+)NZM3-4-XKR13 To be screwed tonto the busbar by means of a claw-type of clamp.	NZM3-4-XAD630	138389	1

Terminal for Device Adadpter NZM

NZM2-4-XKR4

250	690	–	–	To cover the connection to the system at the top	NZM2-4 PN2-4 N2-4 NS2-4	For device combination NZM2 use with auxiliary type +NZM2-4-XKR40	NZM2-4-XKR4	118907	1

NZM2-4-XKR4

630	690	–	–	To cover the connection to the system at the top	NZM3-4 PN3-4 N3-4 NS3-4	For device combination NZM3 use with auxiliary type +NZM3-4-XKR130	NZM3-4-XKR13	119020	1

[1] To be snapped onto the voltage-free busbar.
[2] Thanks to the combi-base it can be adjusted to a bar width of both 5 and 10 mm, cross-section of conductor 6 x 9 x 0.8.
[3] To be screwed onto the voltage-free busbar.

SASY 60i Busbar System

xStart Busbar Adaptor, 3-pole[1)]

	Max. Rated Operational Current I_e (A)	Rated Operational Voltage U_e (V)	Wire Cross Section	Adapter Width (mm)	Adapter Length (mm)	Support Rails	Utilisation	Notes	Type Designation	Article No.	Units per package
xStart Busbar Adaptor, 3-pole[1)]											
Busbar Adapter xStart 25 A											
wa_vt10913	25	690	AWG12	45	200	1	PKZM0+ Contactor DIL M 7 Contactor DIL M 9 Contactor DIL M 12 Contactor DIL M 15 MSC-D-0,25-M7… to MSC-D-16-M15…	Direct starter set PKZM0-XDM12	BBA0-25	101451	4
wa_vt10513	25	690	AWG12	90	200	1	PKZM0+ 2x Contactor DIL M 7-01 2x Contactor DIL M 9-01 2x Contactor DIL M 12-01 MSC-R-0,25-M7… to MSC-R-12-M12…	Reversing starter set PKZM0-XRM12	BBA0R-25	101453	2
Busbar Adapter xStart 25 A, Universal Type											
wa_vt10713	25	690	AWG12	45	200	12	Support rail adjustable on the 1.25 mm grid	–	BBA0-25/2TS	101481	4
Busbar Adapter xStart 32 A											
wa_vt10813	32	690	AWG10	45	200	2	PKZM0+ Contactor DIL M 17 Contactor DIL M 25 Contactor DIL M 32 MSC-D-16-M17… to MSC-D-32-M32…	Electrical contact module PKZM0-XM32 DE	BBA0-32	101452	4
wa_vt10613	32	690	AWG10	90	200	3	PKZM0+ 2x Contactor DIL M 17-01 2x Contactor DIL M 25-01 2x Contactor DIL M 32-01 MSC-R-16-M17… to MSC-R-32-M32…	Electrical contact module PKZM0-XM32 DE Reverse wiring set DILM32-XRL	BBA0R-32	101454	2
Busbar Adapter xStart 32 A, for Spring-type Terminal											
wa_vt30913	32	690	–	45	200	2	Support rail adjustable on the 1.25 mm grid	With spring-type terminal technology, to 1.5-6 mm². For example for 1-phase applika-tions..	BBA0-32/2TS-C	116708	4

[1)] Can be used with all busbars in a 60 mm system. Thanks to the combi-base it is suitable for both 5 mm and 10 mm thickness of the bar as well as for double-T-profile bars. To be snapped onto the voltage-free busbar.

xStart Busbar Adaptor, 3-pole[1)]

	Max. Rated Operational Current I_e (A)	Rated Operational Voltage U_e (V)	Wire Cross Section	Adapter Width (mm)	Adapter Length (mm)	Support Rails	Utilisation	Notes	Type Designation	Article No.	Units per package
Busbar Adapter xStart 63 A											
wa_vt11213	63	690	AWG8	72	260	2	PKZ2+ Contactor DIL M 7 Contactor DIL M 9 Contactor DIL M 12 Contactor DIL M 17 Contactor DIL M 25 Contactor DIL M 32 Contactor DIL M 40	–	BBA2L-63	101480	2
	63	690	AWG8	72	200	1	PKZ2	–	BBA2-63	101458	4
00581455_0	63	690	AWG8	72	200	2	PKZ2+ Contactor DILM7 - DILM15 DILM17 - DILM38 DILM40 - DILM 65 Switch drive SE1A-PKZ2 and S-PKZ2 in connection with clipsplate C-PKZ2	–	BBA2-63/2TS	116900	2
wa_vt11313	63	690	AWG8	55	260	2	PKZM4+ Contactor DIL M 17 Contactor DIL M 25 Contactor DIL M 32 Contactor DIL M 40 Contactor DIL M 50 Contactor DIL M 65	Electrical connector for PKZM4+DILM40…65: PKZM4-XM65 DE	BBA4L-63	101459	4
	63	690	AWG8	55	200	1	PKZM4	–	BBA4-63	101457	4
Busbar Adapter xStart 80 A											
00581461_0	80	690	–	72	200	2	universal	With screw-type terminal technology up to AWG6, for example for 1-phase (not UL/CSA compatible without an additional component)	BBA2-80/2TS-S	116901	4

[1)] Can be used with all busbars in a 60 mm system. Thanks to the combi-base it is suitable for both 5 mm and 10 mm thickness of the bar as well as for double-T-profile bars. To be snapped onto the voltage-free busbar.

SASY 60i Busbar System

xStart Busbar Adaptor, 3-pole[1)]

Busbar Adapter xStart, Universal Type

	Max. Rated Operational Current I_e (A)	Rated Operational Voltage U_e (V)	Wire Cross Section	Adapter Width (mm)	Adapter Length (mm)	Support Rails	Utilisation	Notes	Type Designation	Article No.	Units per package
wa_vt11013	–	–	–	45	200	2	Support rail adjustable on the 1.25 mm grid	Without electrical contacting, auxiliary to BBA… for the setup of reversing starters, for example	BBA0/2TS-L	101482	4
wa_vt11413	–	–	–	54	260	2	Support rail adjustable on the 1.25 mm grid	Without electrical contacting, auxiliary to BBA… for the setup of reversing starters, for example	BBA4/2TS-L	101483	4

Side Module

wa_vt11513	–	–	–	9	200	–	–	Can be placed on both sides of BBA, to increase the add-on width	BBA-XSM	101484	10

Accessories - Support rail/Connecting cable

Support rail

	Notes	Width (mm)	Type Designation	Article No.	Units per package
wa_vt30813	Used for for BBA... adapter	45	PKZM0-XMR	239364	10
		54	PKZM0-XMR54	113911	10
		72	PKZM0-XMR72	113912	10

Connecting cable

	Notes	Width (mm)	Type Designation	Article No.	Units per package
01063486_0	Used for BBA with screw-type or spring-type terminals	–	BBA-XLT-6-130	116902	30
		–	BBA-XLT-16-142	116903	30

Busbar Double Adapter for DIN modular devices

- Cross-section 6 mm² - I_e = 35 A

	Width (mm)	MU	Cross-section (mm²)	Type Designation	Article No.	Units per package
4300PIC-343	45	2.5	6	Z-SS-60-ADD/6-45	288790	1 / 10
	54	3	6	Z-SS-60-ADD/6-54	288791	1 / 10
	72	4	6	Z-SS-60-ADD/6-72	288792	1 / 10
	81	4.5	6	Z-SS-60-ADD/6-81	288793	1 / 10

[1)] Can be used with all busbars in a 60 mm system. Thanks to the combi-base it is suitable for both 5 mm and 10 mm thickness of the bar as well as for double-T-profile bars. To be snapped onto the voltage-free busbar.

xStart Busbar Adaptor, 3-pole[1], MSC-D…/BBA

01087651_0

Example illustration

Motor data*)			Motorstarter Control voltage 230 V 50 Hz			Motorstarter Control voltage 24 V DC		
Rated Operational Power AC3, 380 V, 400 V, 415 V P (kW)	Rated Operational Current 400 V I_e (A)	Components	Type Designation	Article No.	Units per package	Type Designation	Article No.	Units per package
0.06	0.21	PKZM0-0,25 +DILM7-10 +PKZM0-XDM12 +BBA0-25	MSC-D-0,25-M7(230V50Hz)/BBA	102737	1	MSC-D-0,25-M7(24VDC)/BBA	102964	1
0.09	0.31	PKZM0-0,4 +DILM7-10 +PKZM0-XDM12 +BBA0-25	MSC-D-0,4-M7(230V50Hz)/BBA	102738	1	MSC-D-0,4-M7(24VDC)/BBA	102965	1
0.12 0.18	0.41 0.6	PKZM0-0,63 +DILM7-10 +PKZM0-XDM12 +BBA0-25	MSC-D-0,63-M7(230V50Hz)/BBA	102739	1	MSC-D-0,63-M7(24VDC)/BBA	102966	1
0.25	0.8	PKZM0-1 +DILM7-10 +PKZM0-XDM12 +BBA0-25	MSC-D-1-M7(230V50Hz)/BBA	102950	1	MSC-D-1-M7(24VDC)/BBA	102967	1
0.37 0.55	1.1 1.5	PKZM0-1,6 +DILM7-10 +PKZM0-XDM12 +BBA0-25	MSC-D-1,6-M7(230V50Hz)/BBA	102951	1	MSC-D-1,6-M7(24VDC)/BBA	102968	1
0.75	1.9	PKZM0-2,5 +DILM7-10 +PKZM0-XDM12 +BBA0-25	MSC-D-2,5-M7(230V50Hz)/BBA	102952	1	MSC-D-2,5-M7(24VDC)/BBA	102969	1
1.1 1.5	2.6 3.6	PKZM0-4 +DILM7-10 +PKZM0-XDM12 +BBA0-25	MSC-D-4-M7(230V50Hz)/BBA	102953	1	MSC-D-4-M7(24VDC)/BBA	102970	1
2.2	5	PKZM0-6,3 +DILM7-10 +PKZM0-XDM12 +BBA0-25	MSC-D-6,3-M7(230V50Hz)/BBA	102954	1	MSC-D-6,3-M7(24VDC)/BBA	102971	1
3	6.6	PKZM0-10 +DILM7-10 +PKZM0-XDM12 +BBA0-25	MSC-D-10-M7(230V50Hz)/BBA	102955	1	MSC-D-10-M7(24VDC)/BBA	102972	1
4	8.5	PKZM0-10 +DILM9-10 +PKZM0-XDM12 +BBA0-25	MSC-D-10-M9(230V50Hz)/BBA	102956	1	MSC-D-10-M9(24VDC)/BBA	102973	1
5.5	11.3	PKZM0-12 +DILM12-10 +PKZM0-XDM12 +BBA0-25	MSC-D-12-M12(230V50Hz)/BBA	102957	1	MSC-D-12-M12(24VDC)/BBA	102974	1
7.5	15.2	PKZM0-16 +DILM17-10 +PKZM0-XM32 +BBA0-32	MSC-D-16-M17(230V50Hz)/BBA	102961	1	MSC-D-16-M17(24VDC)/BBA	102978	1
11	21.7	PKZM0-25 +DILM25-10 +PKZM0-XM32 +BBA0-32	MSC-D-25-M25(230V50Hz)/BBA	102962	1	MSC-D-25-M25(24VDC)/BBA	102979	1
15	29.3	PKZM0-32 +DILM32-10 +PKZM0-XM32 +BBA0-32	MSC-D-32-M32(230V50Hz)/BBA	102963	1	MSC-D-32-M32(24VDC)/BBA	102980	1

*) Technical details see Eaton main catalogue Industrial Switch Gear

1) Can be used with all busbars in a 60 mm system. Thanks to the combi-base it is suitable for both 5 mm and 10 mm thickness of the bar as well as for double-T-profile bars. To be snapped onto the voltage-free busbar.

SASY 60i Busbar System

xStart Busbar Adaptor, 3-pole[1], MSC-R…/BBA

01088617_0

Example illustration

Motor data*)			Motorstarter Control voltage 230 V 50 Hz			Motorstarter Control voltage 24 V DC		
Rated Operational Power AC3, 380 V, 400 V, 415 V P (kW)	Rated Operational Current 400 V I_e (A)	Components	Type Designation	Article No.	Units per package	Type Designation	Article No.	Units per package
0.06	0.21	PKZM0-0,25 +2xDILM7-01 +PKZM0-XMR12 +BBA0R-25	MSC-R-0,25-M7(230V50Hz)/BBA	102981	1	MSC-R-0,25-M7(24VDC)/BBA	102997	1
0.09	0.31	PKZM0-0,4 +2xDILM7-01 +PKZM0-XMR12 +BBA0R-25	MSC-R-0,4-M7(230V50Hz)/BBA	102982	1	MSC-R-0,4-M7(24VDC)/BBA	102998	1
0.12 0.18	0.41 0.6	PKZM0-0,63 +2xDILM7-01 +PKZM0-XMR12 +BBA0R-25	MSC-R-0,63-M7(230V50Hz)/BBA	102983	1	MSC-R-0,63-M7(24VDC)/BBA	102999	1
0.25	0.8	PKZM0-1 +2xDILM7-01 +PKZM0-XMR12 +BBA0R-25	MSC-R-1-M7(230V50Hz)/BBA	102984	1	MSC-R-1-M7(24VDC)/BBA	103000	1
0.37 0.55	1.1 1.5	PKZM0-1,6 +2xDILM7-01 +PKZM0-XMR12 +BBA0R-25	MSC-R-1,6-M7(230V50Hz)/BBA	102985	1	MSC-R-1,6-M7(24VDC)/BBA	103001	1
0.75	1.9	PKZM0-2,5 +2xDILM7-01 +PKZM0-XMR12 +BBA0R-25	MSC-R-2,5-M7(230V50Hz)/BBA	102986	1	MSC-R-2,5-M7(24VDC)/BBA	103002	1
1.1 1.5	2.6 3.6	PKZM0-4 +2xDILM7-01 +PKZM0-XMR12 +BBA0R-25	MSC-R-4-M7(230V50Hz)/BBA	102987	1	MSC-R-4-M7(24VDC)/BBA	103003	1
2.2	5	PKZM0-6,3 +2xDILM7-01 +PKZM0-XMR12 +BBA0R-25	MSC-R-6,3-M7(230V50Hz)/BBA	102988	1	MSC-R-6,3-M7(24VDC)/BBA	103004	1
3	6.6	PKZM0-10 +2xDILM7-01 +PKZM0-XMR12 +BBA0R-25	MSC-R-10-M7(230V50Hz)/BBA	102989	1	MSC-R-10-M7(24VDC)/BBA	103005	1
4	8.5	PKZM0-10 +2xDILM9-01 +PKZM0-XMR12 +BBA0R-25	MSC-R-10-M9(230V50Hz)/BBA	102990	1	MSC-R-10-M9(24VDC)/BBA	103006	1
5.5	11.3	PKZM0-12 +2xDILM12-01 +PKZM0-XMR12 +BBA0R-25	MSC-R-12-M12(230V50Hz)/BBA	102991	1	MSC-R-12-M12(24VDC)/BBA	103007	1
7.5	15.2	PKZM0-16 +2xDILM17-01 +PKZM0-XMR32 +DILM32-XRL	MSC-R-16-M17(230V50Hz)/BBA	102994	1	MSC-R-16-M17(24VDC)/BBA	103010	1
11	21.7	PKZM0-25 +2xDILM25-01 +PKZM0-XMR32 +DILM32-XRL	MSC-R-25-M25(230V50Hz)/BBA	102995	1	MSC-R-25-M25(24VDC)/BBA	103011	1
15	29.3	PKZM0-32 +2xDILM32-01 +PKZM0-XMR32 +DILM32-XRL	MSC-R-32-M32(230V50Hz)/BBA	102996	1	MSC-R-32-M32(24VDC)/BBA	103012	1

*) Technical details see Eaton main catalogue Industrial Switch Gear

1) Can be used with all busbars in a 60 mm system. Thanks to the combi-base it is suitable for both 5 mm and 10 mm thickness of the bar as well as for double-T-profile bars. To be snapped onto the voltage-free busbar.

Slide Fuse Equipment, 3-pole

D-Type Slide Fuse-Base

- Delivered empty, without screw caps

sg03516, sg03716, sg03616

Max. Rated Operational Current I_e (A)	Rated Voltage U_e (V AC)	Size	Utilisation	Width	Notes	Type Designation	Article No.	Units per package
63	400	E18, D02	12 x 5/10 20 x 5/10 25 x 5/10 30 x 5/10 Double-T	27	Cartridge-ring adapter insert	D02-SO/63/3-R-27[1]	114315	10
				36	Cartridge-ring adapter insert	Z-D02/R/3-36[2]	100663	10
				54	Cartridge-ring adapter insert	Z-D02/R/3-54[2]	100664	10

wa_sg01112

25	500	E27, DII	12 x 5/10 20 x 5/10 25 x 5/10 30 x 5/10 Double-T	45	Gauge ring	DII-SO/25/3-R[1]	107965	10
					Screw-in gauge ring	DII-SO/25/3-R-PS[1]	110394	10

wa_sg01212

63	690	E33, DIII	12 x 5/10 20 x 5/10 25 x 5/10 30 x 5/10 Double-T	45	Gauge ring	DIII-SO/63/3-R[1]	107966	10
					Screw-in gauge ring	DIII-SO/63/3-R-PS[1]	110395	10

D-Type Slide Fuse-Base, compact-type

- Incl. shock hazard protection cover with front and bottom plate and marking label
- Delivered empty, without screw caps

SG82411

63	400	E18, D02	12 x 5/10	36	Cartridge-ring adapter insert, snap-on mechanism mechanism when sliding it onto the busbar.	FCFBD02BBC60-3-36[1]	139532	6

Designation	Utilisation	Width	Notes	Type Designation	Article No.	Units per package
Covers						
Set for covering busbar support	D02	36	Suitable for D02-SO/63/3-R-27	Z-D02-S-AB-SET	100662	10

SG60412

wa_sg01713

Side cover	DII	–	Suitable for DII.-SO/.../3-R(-PS)	SBS-RS60	060541	10

[1] Incl. shock hazard protection cover with front and bottom plate
[2] Incl. shock hazard protection cover without front and bottom plate

SASY 60i Busbar System

Slide Fuse Equipment, 3-pole

Max. Rated Operational Current I_e (A)	Rated Voltage U_e (V AC)	Size	Width	Utilisation	Notes	Type Designation	Article No.	Units per package
Screw Caps								
63	400	E18, D02	–	D02-SO...	–	Z-D02/SK	100651	20/500
25	500	E27, D II	–	DII-SO...	–	Z-DII/SK	112148	50/600
63	500	E33, D III	–	DIII-SO...	–	Z-DIII/SK	112149	30/360
63	690	E33, D III	–	DIII-SO...	–	Z-DIII/SK-690	118904	3

wa_sg04013

Adapter Spring

- To accommodate D01 fuse-links in Z-D02/SK screw caps

16	–	D02-D01	–	–	–	Z-D02/SIKA-HF	263149	50/3000

wa_sg02612

D02 Switch-Disconnector-Fuse

- Incl. shock hazard protection cover with front and bottom plate
- Delivered empty, without screw caps

63	400	E18, D02	20 x 5/10 30 x 5/10 Double-T	36	Cartridge-ring adapter insert	D02-S/63/3-RS	284649	10

SG45912

Screw Caps

63	400	E18, D02	–	D02-SO...	–	Z-D02/SK	100651	20/500

wa_sg04013

Adapter Spring

- To accommodate D01 fuse-links in Z-D02/SK screw caps

16	–	D02-D01	–	–	–	Z-D02/SIKA-HF	263149	50/3000

wa_sg02612

Switch-Disconnector-Fuse D02 (+D01) + C

- Visiual tripping indicator is flashing
- Delivered empty, without cartridge-ring adapter inserts and fuse-links
- Delivered with adapter springs for fuse-links D01 or cylindrical fuse-links 10x38
- Contact position indicator
- Plug-in technique without screw caps
- All-pole and hand independent switching of load
- Version D02-LTS/63/3-R-HK with incorporated auxliliary switch
- Lead-seal- and lockable

3P

SG82311

Max. Rated Operational Current I_e (A)	Rated Voltage U_e (V AC)	Size	Width	Utilisation	Notes	Type Designation	Article No.	Units per package
63	400	E18, D02	27	12 x 5/10 15 x 5/10	Cartridge-ring adapter insert without auxiliary switch	D02-LTS/63/3-R	114316	3
32	400	C 10x38		20 x 5/10 25 x 5/10 30 x 5/10 Double-T	Cartridge-ring adapter insert with auxiliary switch	D02-LTS/63/3-R-HK	114318	3

3P+N

SG82211

Max. Rated Operational Current I_e (A)	Rated Voltage U_e (V AC)	Size	Width	Utilisation	Notes	Type Designation	Article No.	Units per package
63	400	E18, D02	27	12 x 5/10 15 x 5/10	Cartridge-ring adapter insert without auxiliary switch	D02-LTS/63/3N-R	114317	3
32	400	C 10x38		20 x 5/10 25 x 5/10 30 x 5/10 Double-T	Cartridge-ring adapter insert with auxiliary switch	D02-LTS/63/3N-R-HK	114319	3

Accessories for D02-LTS/63..

D0	Fuse-links Z-D0./SE-... Cartridge-ring adapter inserts D01: Z-D02-D01/PE-... D02: Z-D02/PE-... Adapter spring Z-D02-LTS-HF (scope of delivery)
C	Fuse-links Z-C10/SE-... Adapter spring Z-D02-LTS-HF (scope of delivery)
	See Fuse Material Accessories

Adapter Spring

- To accommodate D01 fuse-links or cylindrical fuse-links 10x38 in the Switch-disconnector-fuse D02-LTS/63...

SG81811

I_e (A)	U_e (V AC)	Size	Width	Utilisation	Notes	Type Designation	Article No.	Units per package
16 32	–	D02-D01 C 10x38	–	–	–	Z-D02-LTS-HF	114323	12/288

Current Load Busbars, according to DIN EN 13601

For busbar applications that have not been type-tested, UL508A allows an ampacity of 1000A/inch² (1.55A/mm²) if no tests have been carried out. This value may be higher if the product or the application has been tested accordingly. Eaton has conducted extensive tests for the user's maximum benefit in using the SASY 60i busbar system. The advantage of such tests is that one can use the SASY60i busbar system with higher rated currents than the default value allows. A busbar of size 30x10 mm for example can be charged with 630A instead of 465A only.
Higher current carrying capacities to DIN 43671 were obtained under operating conditions.
Busbar temperature is normally positively influenced by mounting components on the busbar and by air circulation within the installation.
Depending on the respective ambient temperature, you can calculate the correction factor k2 according to DIN 43 671 for flat busbars. If ambient conditions change, a correction factor needs to be taken into account.
On the other hand, increased loads may occur if the components feature a correspondingly high temperature resistance.
A 30 x 10 tin-plated busbar can under normal conditions be loaded with 630 A. With a load of 800A, for instance, a k2 correction factor of 1.3 is necessary. It follows from the diagram that with this factor and 35°C air temperature, the busbar heats up to approx. 85°C.

Current load CU-BAR-500/T

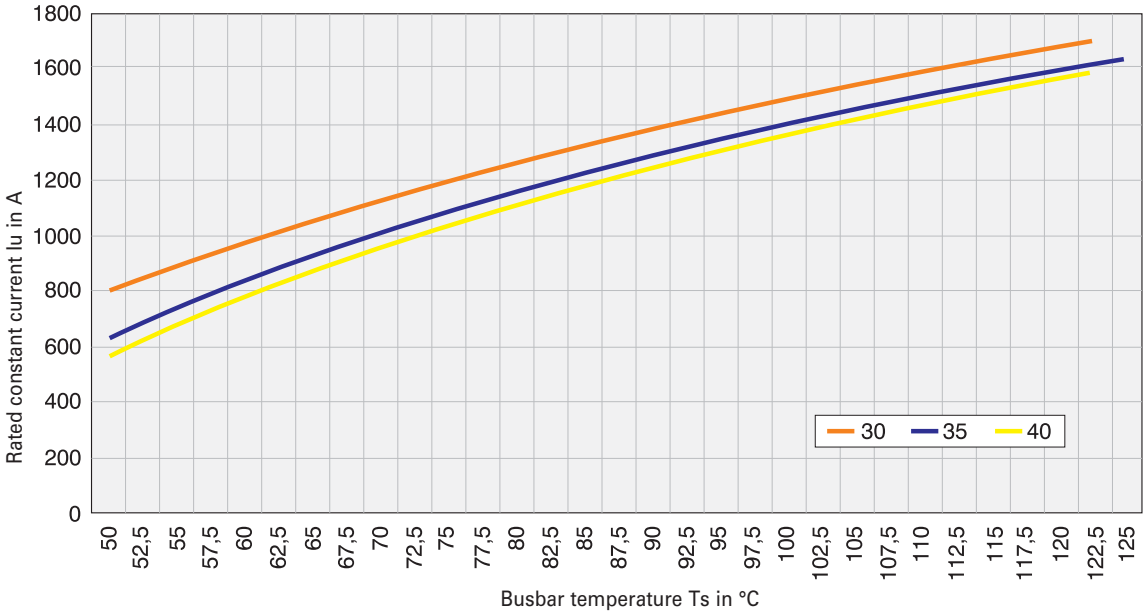

Current load CU-BAR-720/T

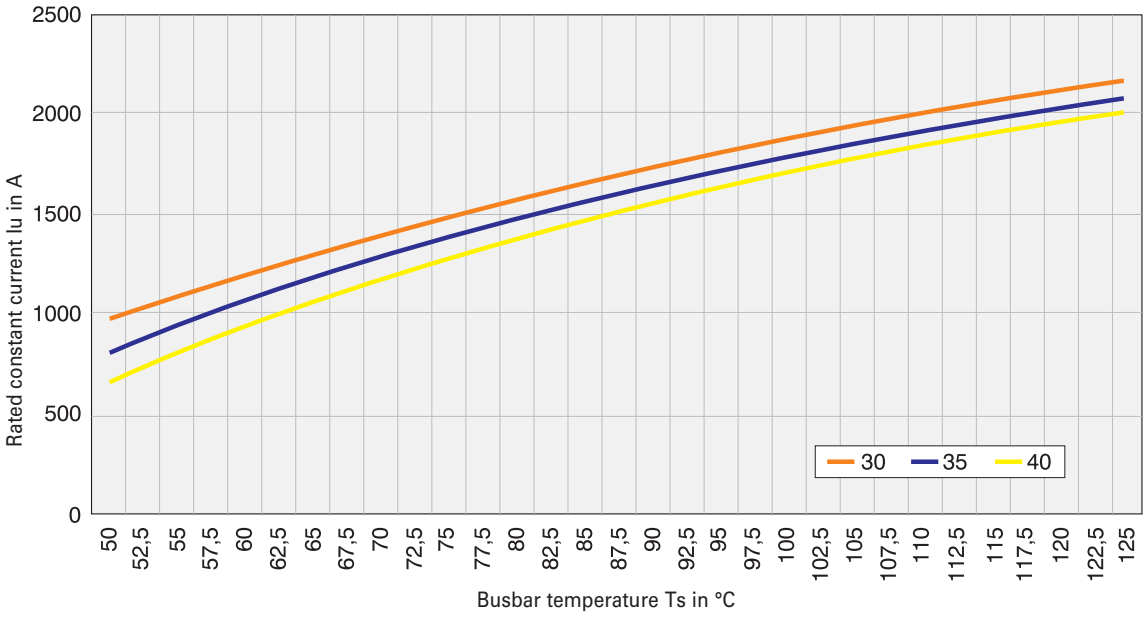

Short-circuit strength diagrams according to IEC/EN 61439-1 for 60 mm SASY 60i Busbar Systems

BBS-3/FL

107066 • Values measured during type-testing

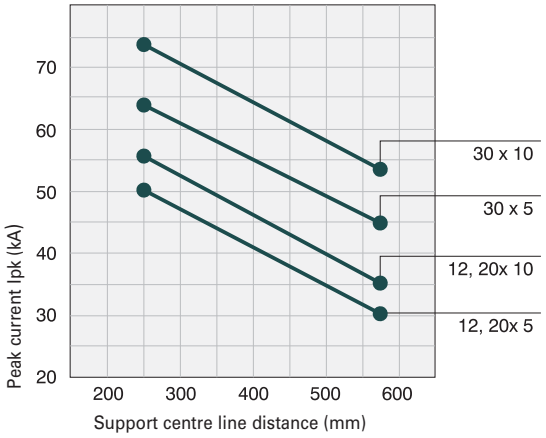

BBS-3/PR

107162 • Values measured during type-testing

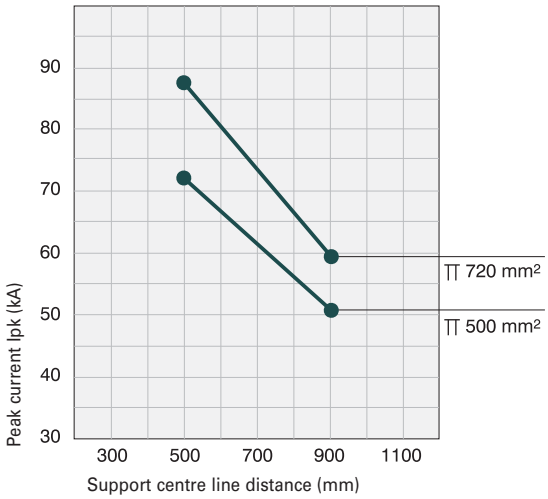

BBS-3/FL-C

138370 • Values measured during type-testing

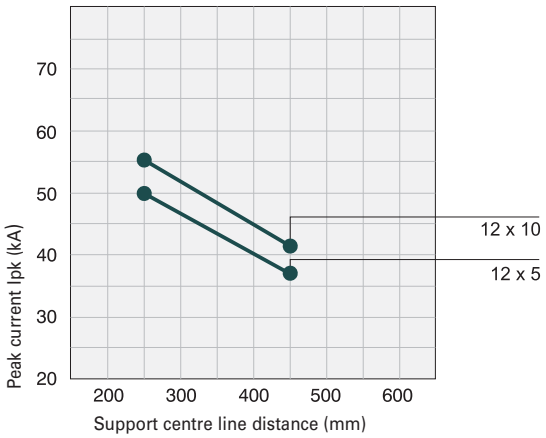

Short-circuit strength diagrams according to UL 845 for 60 mm SASY 60i Busbar Systems

BBS-3/FL-NA

107067 • Values measured during type-testing

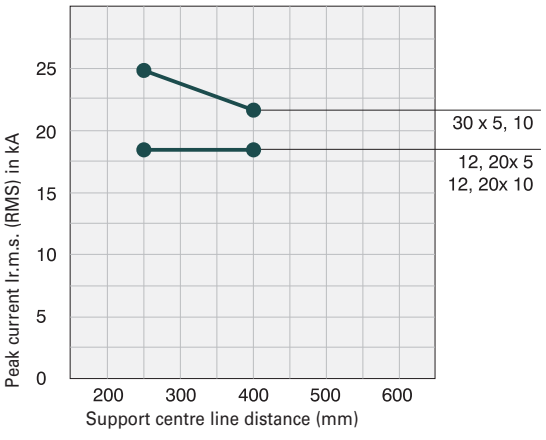

BBS-3/PR

107162 • Values measured during type-testing

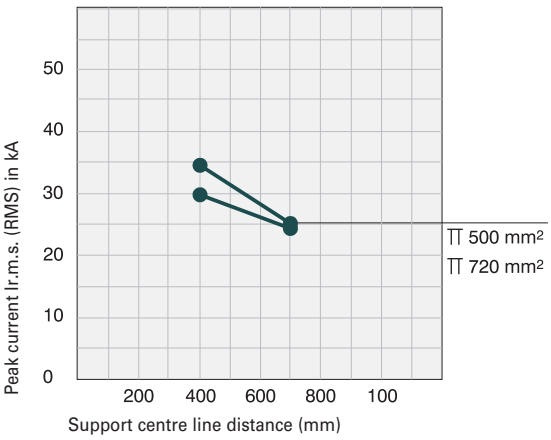

Technical Data Bar Support

		BBS-./FL(-NA)	BBS-./PR	BBS-3/FL-C
General Information				
Standards and regulations		type-tested according to VDE 0660 Part 500, IEC/EN 61439-1		
Fitting position		vertical, horizontal		
Material				
Material		Thermoplasticic, silicone-free, chlorine-free		
Halogen-free		yes	yes	yes
Flammability		Self-extinguishing according to UL 94		
Colour		RAL 7035	RAL 7035	RAL 7035
Track resistance		CTI 200	CTI 200	CTI 200
Uninterrupted duty temperature		120	120	120
Current Paths				
Rated insulation voltage	U_i	3000 V	3000 V	3000 V
Rated operational voltage	U_e	690 V	690 V	690 V
Rated frequency	f	50/60 Hz	50/60 Hz	50/60 Hz
Centre line distance of busbars		60 mm	60 mm	60 mm
Rated uninterrupted current	I_u	In case of temperature variances, DIN 43671 requires a kA correction factor to be taken into account		
with busbar 12 x 5 mm		218 A	-	200 A
with busbar 15 x 5 mm		273 A	-	-
with busbar 20 x 5 mm		349 A	-	-
with busbar 25 x 5 mm		436 A	-	-
with busbar 30 x 5 mm		491 A	-	-
with busbar 12 x 10 mm		392 A	-	360 A
with busbar 20 x 10 mm		567 A	-	-
with busbar 30 x 10 mm		687 A	-	-
with 500 mm²		-	1003 A	-
with 720 mm²		-	1281 A	-
Ambient temperature		35 °C	35 °C	35 °C
Temperature of busbar		70 °C	70 °C	70 °C
Rated peak withstand current	I_{pk}			
with busbar 12 x 5 mm		50 kA	-	50 kA
with busbar 15 x 5 mm		50 kA	-	-
with busbar 20 x 5 mm		50 kA	-	-
with busbar 25 x 5 mm		50 kA	-	-
with busbar 30 x 5 mm		64 kA	-	-
with busbar 12 x 10 mm		56 kA	-	55 kA
with busbar 20 x 10 mm		56 kA	-	-
with busbar 30 x 10 mm		73 kA	-	-
with 500 mm²		-	72 kA	-
with 720 mm²		-	87 kA	-
Short-circuit time		20 ms	20 ms	20 ms
Support centre line distance		250 mm	500 mm	250 mm

Technical Data Copper Bars

		CU...	CU-BAR-...-T	CU-BAR-1140/T
General Information				
Standards and regulations		EN 13061, UL 508		
Current Paths				
Rated uninterrupted current T_u = 35 °C and T_s = 65 °C	I_u	In case of temperature variances, DIN 43671 requires a kA correction factor to be taken into account		
with busbar 12 x 5 mm		200 A	-	-
with busbar 20 x 5 mm		349 A	-	-
with busbar 30 x 5 mm		491 A	-	-
with busbar 12 x 10 mm		392 A	-	-
with busbar 20 x 10 mm		567 A	-	-
with busbar 30 x 10 mm		687 A	-	-
with 500 mm²		-	1003 A	-
with 720 mm²		-	1281 A	-
1140 mm²		-	-	2500 A

Conductor connections

The ratios between conductor cross-sections in mm² and AWG/MCM-sizes are listed below:

1.5 mm²	16 AWG
2.5 mm²	14 AWG
4 mm²	12 AWG
6 mm²	10 AWG
10 mm²	8 AWG
16 mm²	6 AWG
25 mm²	4 AWG
35 mm²	2 AWG
50 mm²	0 AWG
70 mm²	2/0 AWG
95 mm²	3/0 AWG
120 mm²	250 MCM
150 mm²	300 MCM
185 mm²	350 MCM
240 mm²	500 MCM
300 mm²	600 MCM

Busbar Support

60 mm system according to IEC

- 1-pole for busbars 12x5 – 30x10, double-T-bars
- 2-pole for busbars 12x5 – 30x10
- 3-pole for busbars 12x5 – 30x10 and 12/20/ 30 x 5/10
- 3-pole for double-T-bars
- Tighten screws for fixing the cover and bottom of the support at a torque of 4 Nm min.

60 mm system according to UL

- 3-pole for busbars 12/20/ 30 x 5/10
- 3-pole for double-T-bars
- Tighten screws for fixing the cover and bottom of the support at a torque of 4 Nm min.

Silicone-free, chlorine-free	
Temperature resistant up to	120 °C
Self-extinguishing	according to UL 94
Track resistance	CTI 200

Busbars according to DIN EN 13601

Tin-plated Cu-bars significantly reduce the work necessary for preparing the contact points.

Cu-busbars are r.m.sectively protected against aggressive environments.

Dimension		Cross-section
Double-T		500 mm²
Triple-T		720 mm²
Permissible tolerances		
Radius	R	0.3 … 0.7
Width		+ 0.1 / – 0.5
Thickness		+ 0.1 / – 0.1
Center line distance		
60 mm system		± 0.5 mm
Variance on the contacting level		0.4 mm

Ampacity with copper bars

Cross-sections of bars	Surface	Ampacity according to IEC 35 °C ambient temp., 65 °C bar temp.	Ampacity according to UL/CSA
mm	mm²	A	A
12 x 5	60	200	200
20 x 5	100	320	320
30 x 5	150	450	450
12 x 10	120	360	360
20 x 10	200	520	520
30 x 10	300	630	630
Double-T	500	950	950
Triple-T	720	1200	1200

Dimensions

BBS-4/FL

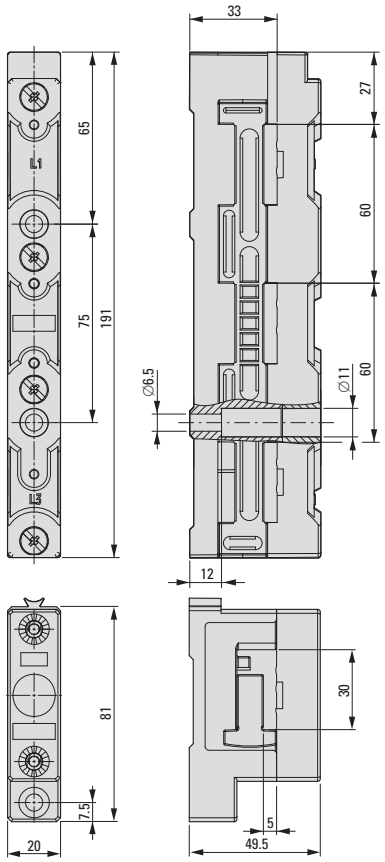

BBS-3/FL

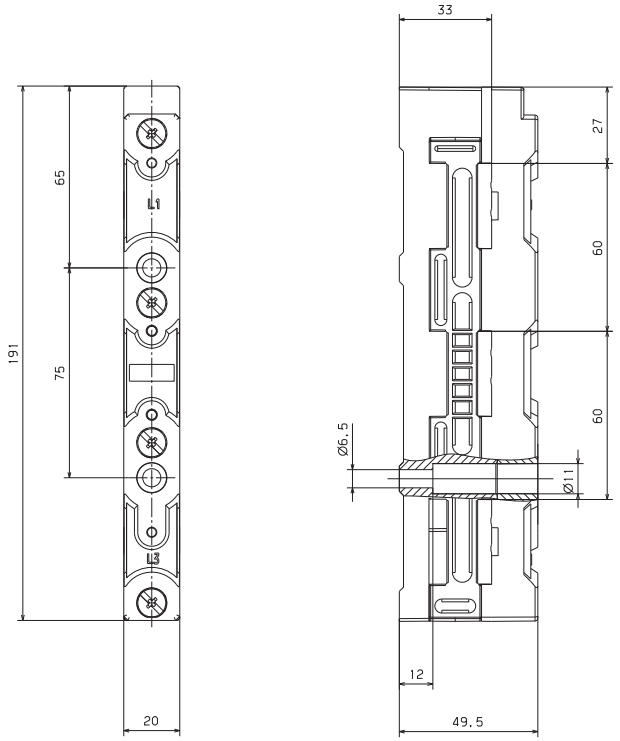

BBS-3/FL-NA

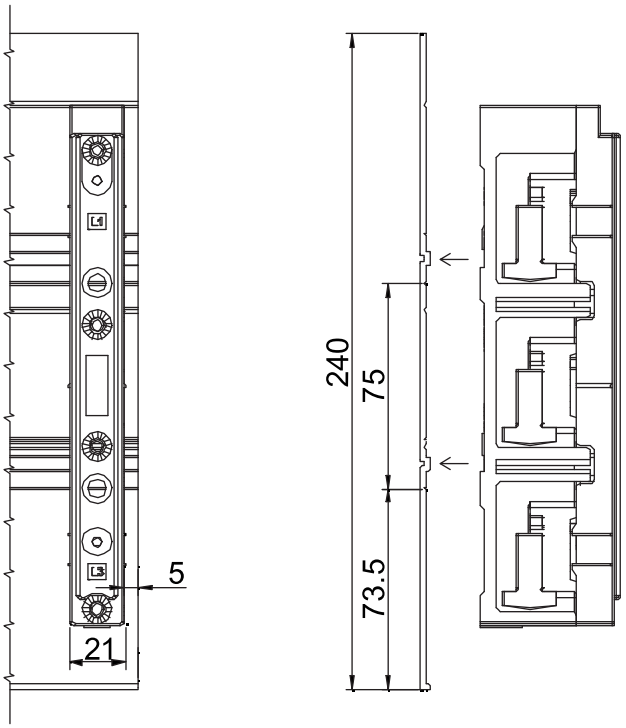

ES-BBS-3/FL

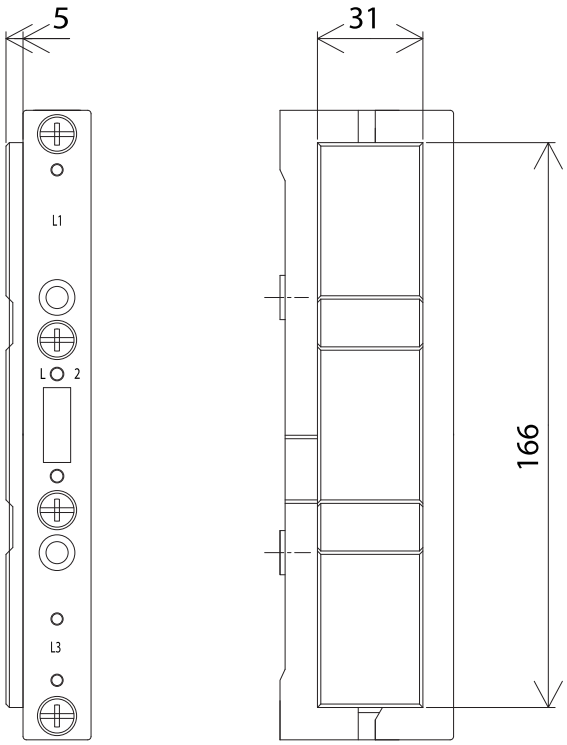

BBS-2/FL

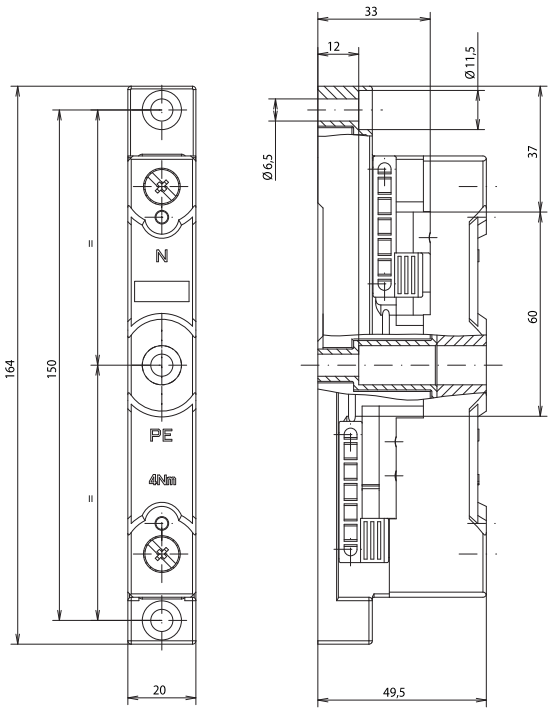

BBS-1/FL

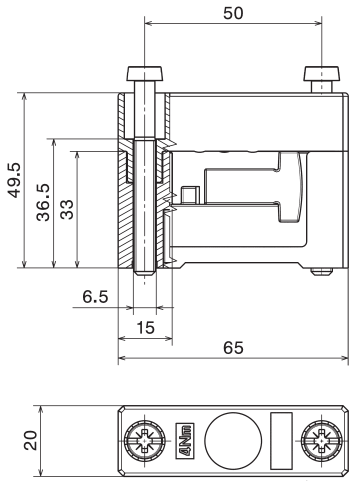

BBS-3/PR

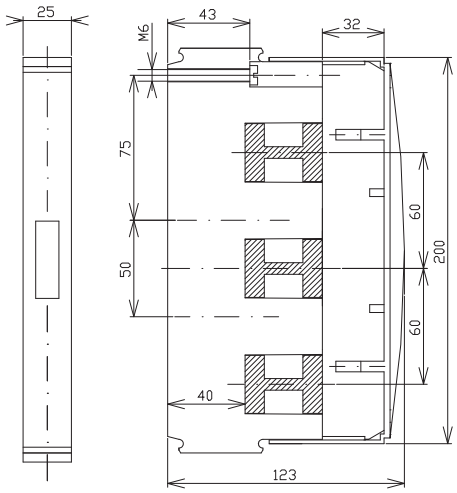

BBS-1/PR

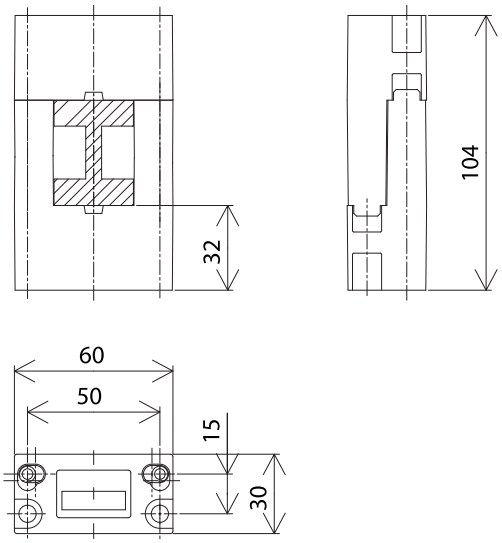

ES-BBS-3/PR

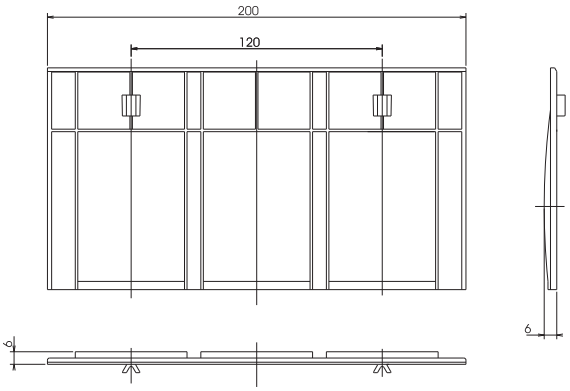

BBC-BT-NA

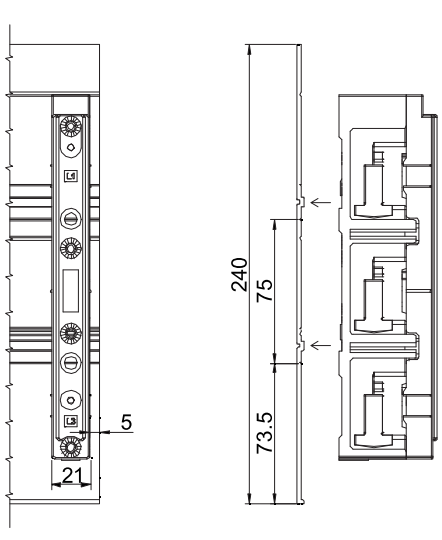

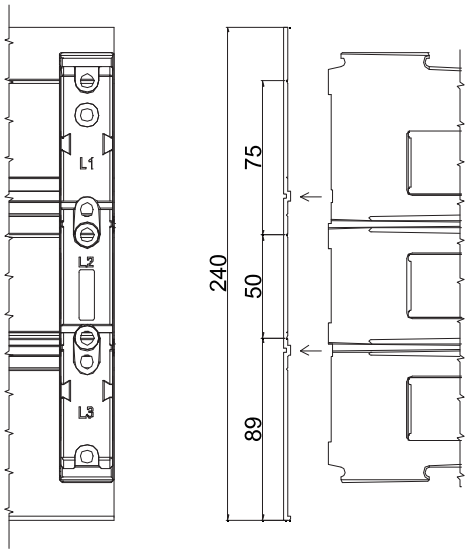

CU-BAR-500/T

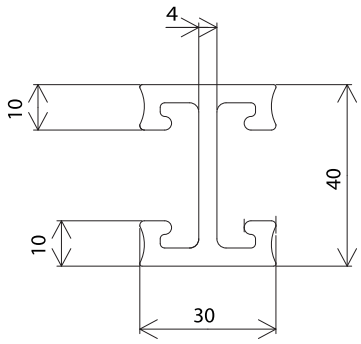

CU-BAR-720/T

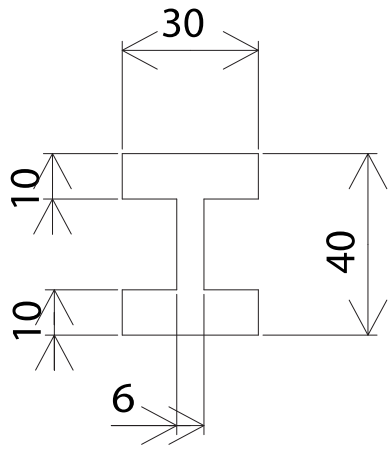

BBC-CU-BAR/PR

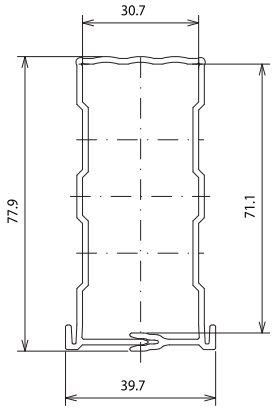

BBC-RCOV1, BBC-MRCOV1

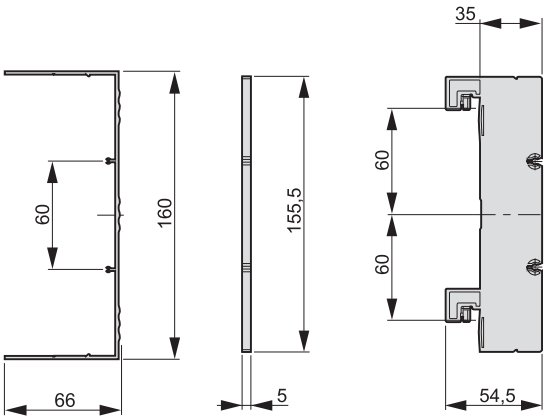

BBC-CS1, BBC-CS2

a (mm)	b (mm)	c (mm)
228	194	214

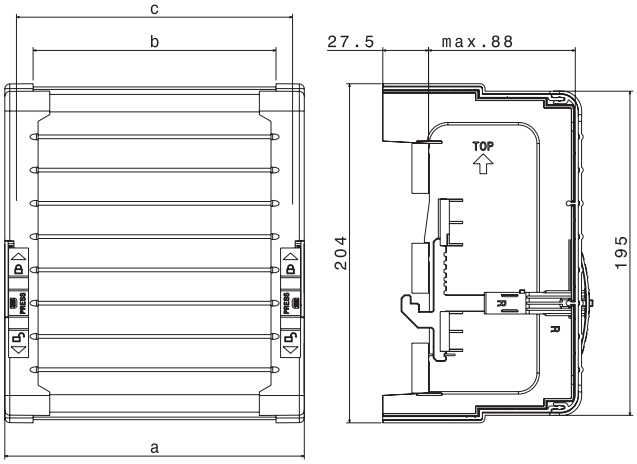

BBC-CS48/PR

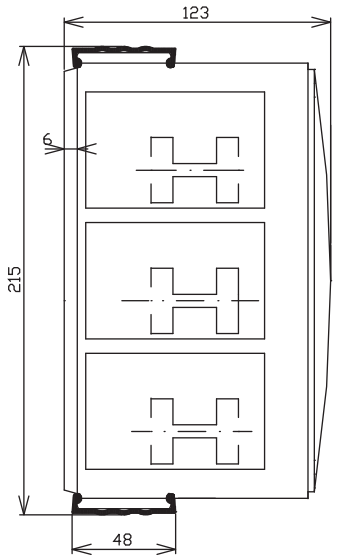

BBC-CS76/PR

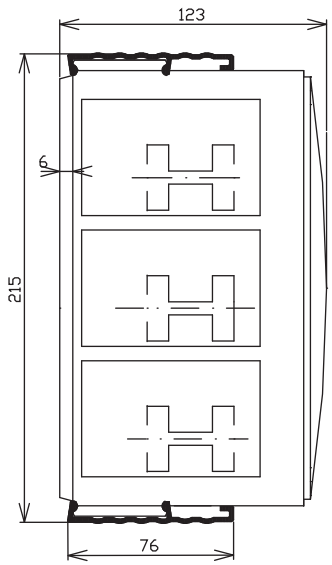

BBC-CS3

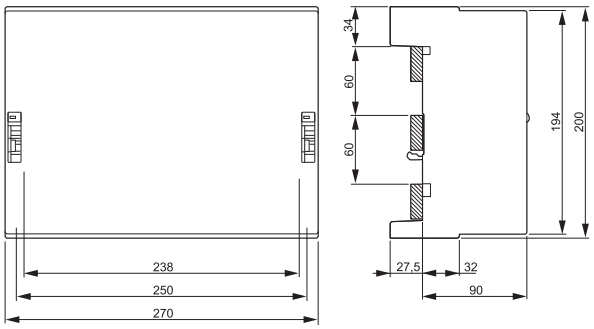

BBC-CS4

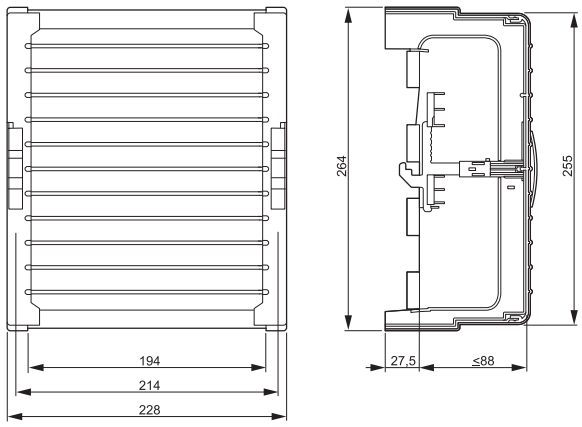

AM-195/54

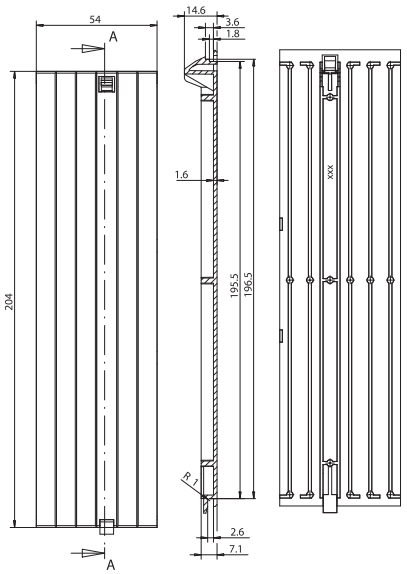

Connecting Terminal Plates BBA-TP

Incl. cover cap	**BBA-TP**
16, 50, 120 mm²	
3-pol., 690 V~	
Centre line distance of busbars 60 mm	
Busbars … x 5 – 10, Double-T-Profiles	
Terminal plates	
Silicone-free, chlorine-free	
Temperature resistant up to	120 °C
Self-extinguishing	according to UL 94
Track resistance	CTI 200
Cover cap	
Silicone-free, chlorine-free	
Temperature resistant up to	120 °C
Self-extinguishing	according to UL 94

Suitable conductors[1)]	Current carrying capacity of contact point*	Termination space BxH mm	Busbars BxH mm	Typ
1.5–16 mm² Cu, ○, ◎ **	80 A	–	… x 5 – 10 TT	BBA-TP3/16
6–50 (70) mm² Cu, ○, ◎ **, ▤ 6 x 9x 0.8	300 A	10 x 15	… x 5 – 10 TT	BBA-TP3/50
35–120 mm² Cu, ○, ◎ **, ▤ 6 / 10 x 16 x 0.8	40 A	15 x 15	… x 5 – 10 TT	BBA-TP3/120

Connecting set, 3-pole, BBA-TP, AKS

Incl. cover cap

Suitable conductors[1)]	Current carrying capacity of contact point*	Termination space BxH mm	Busbars BxH mm	Typ
95–300 mm² Cu, Al***, ○, ◇, ◎	560 A		20x5 - 30x10 TT	BBA-TP3/300
▤ 3 x 20 x 1 to 10 x 32 x 1	800 A	32 x 25	20x5 - 30x10 TT	BBA-TP3/CUBAND
▤, ■ (2x) 50 x 10	1600 A	55 x 28	20x5 - 30x10 TT	AKS1000

* Current carrying capacities specified reflect the thermal capacities of the contact points under favourable conditions (with a maximum of conductors that can be connected). They do not, however, invalidate the validity of conductor cross-sections and of current carrying capacities required by any national and international regulations.
** A reduction of maximum conductor cross-sections might be necessary
*** Connections to aluminium conductors are not maintenance-free

1) ○ Round conductor, single-wired
◎ Round conductor, fine-wired with expertly pressed wire end ferrule
○ Round conductor, multi-wired
◇ Sector conductor, single-wired
◈ Sector conductor, multi-wired
▤ Cu-Band
■ Cu-Bar

Dimensions

BBA-TP3/16

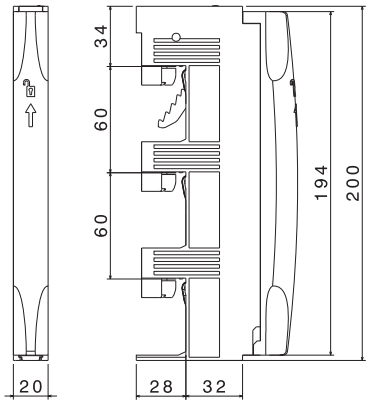

BBA-TP3/50

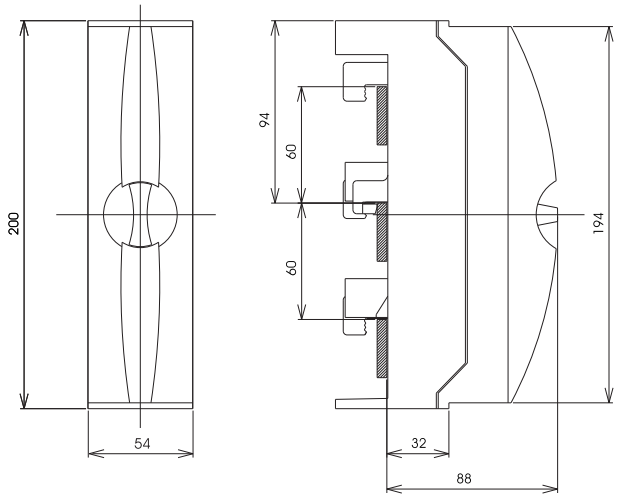

BBA-TP3/120

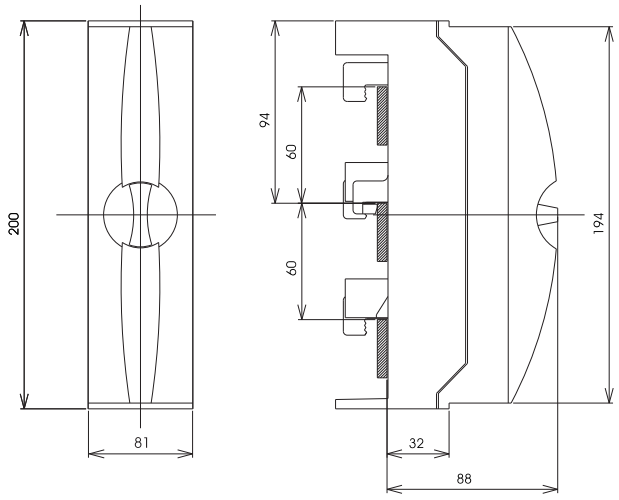

BBA-TP3/300

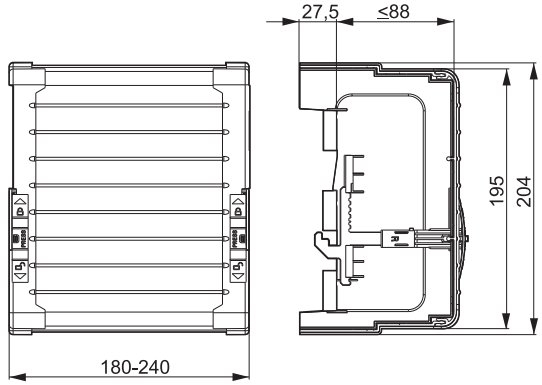

BBA-TP3/CU-BAND

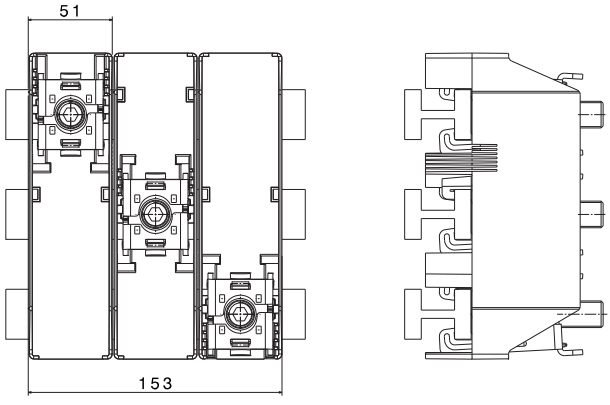

BBA-TP3/1000

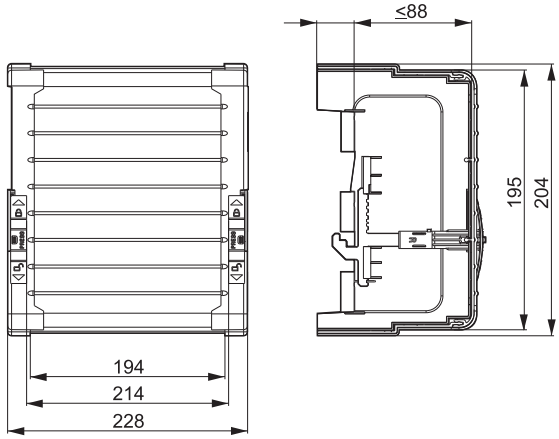

Note:
BBA-TP3/1000 consists of 3x AKS1000 and 1x BBC-CS1.

BBA-TP4/300

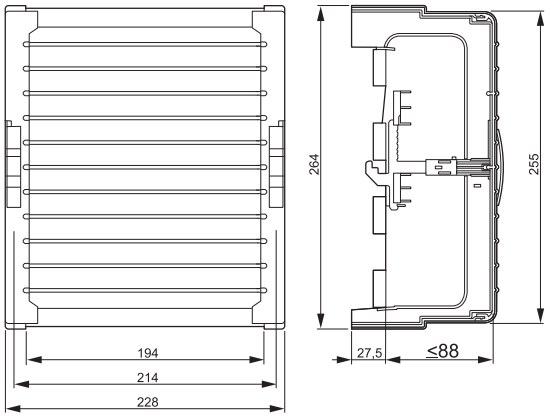

BBA-TP4/CU-BAND

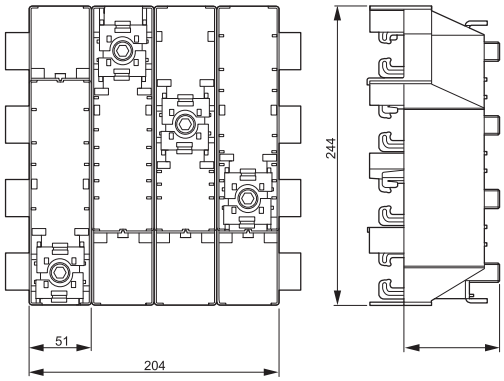

Brace Terminals AKS

For connecting round conductors of 95–300 mm² and multi-layer copper bars.
The gripper-type of termination technology allows to embrace both sides of the busbar and to connect the conductor without drilling.

Suitable conductors[1)]	Current carrying capacity of contact point*	Termination space BxH mm	Busbars BxH mm	Typ
95–185 mm² Cu, Al***,	500 A	–	20x5 - 30x10 TT	AKS185
95–300 mm² Cu, Al***,	600 A	–	20x5 - 30x10 TT	AKS300
3 x 20 x 1 to 10 x 32 x 1	800 A	32 x 25	20x5 - 30x10 TT	AKS-CU-BAND
, (2x) 50 x 10	1600 A	55 x 28	20x5 - 30x10 TT	AKS1000

Profile Terminals for Double-T-Bars AKP

Current carrying capacity of contact point	Profile	Termination space B x H (without spacers)	Typ
1600 A	TT	41 x 20 – 42	AKP800
1600 A	TT	51 x 20 – 42	AKP1000
Use spacers provided when two multi-layer CU-BAND types of copper busbars are connected in parallel.			

Universal Conductor Terminals AKU

Used for connecting conductors featuring cross-sections of 1.5–120 mm² on busbars 5 or 10 mm thick.
Integrated retaining springs, an open terminal space and captive terminal screws make the installation job easy.

Suitable conductors[1)]	Current carrying capacity of contact point*	Termination space BxH mm	Busbars BxH mm	Typ
1.5–16 mm² Cu, , , , , 8 x 6 x 0.5	180 A	7.5 x 7.5	… x 5 … x 10	AKU16/5 AKU16/10
4–35 mm² Cu, , , , , 3/6 x 9 x 0.8	270 A	10.5 x 11	… x 5 … x 10	AKU35/5 AKU35/10
16–70 mm² Cu, , , , 2x 3/6 x 9 x 0.8, 6 x 13 x 0.5	400 A	14 x 14	… x 5 … x 10	AKU70/5 AKU70/10
16–120 mm² Cu, , , , 4/6/10 x 16 x 0.8	440 A	17 x 15	… x 5 … x 10	AKU120/5 AKU120/10

* Current carrying capacities specified reflect the thermal capacities of the contact points under favourable conditions (with a maximum of conductors that can be connected). They do not, however, invalidate the validity of conductor cross-sections and of current carrying capacities required by any national and international regulations.
** A reduction of maximum conductor cross-sections might be necessary
*** Connections to aluminium conductors are not maintenance-free

1) Round conductor, single-wired
Round conductor, fine-wired with expertly pressed wire end ferrule
Round conductor, multi-wired
Sector conductor, single-wired
Sector conductor, multi-wired
Cu-Band
Cu-Bar

Dimensions

AKS185

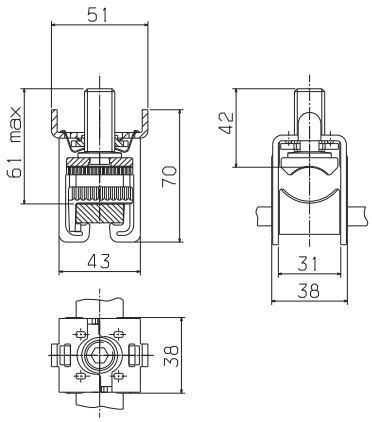

AKS300

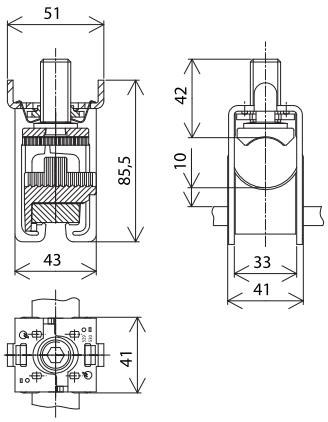

AKS-CU-BAND

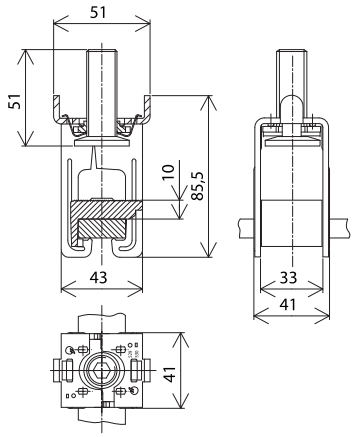

AKS1000

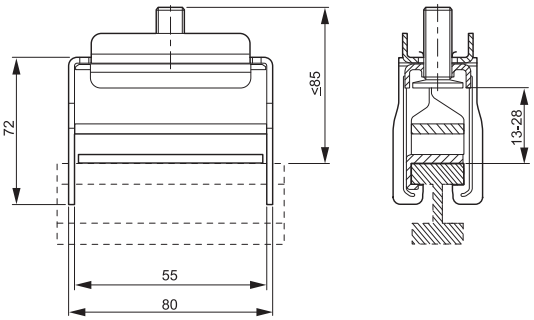

AKS1200, AKS2000

Type	a (mm)	b (mm)	c (mm)	d (mm)
AKS1200	85	80	68	13-38
AKS2000	122	80	105	13-38

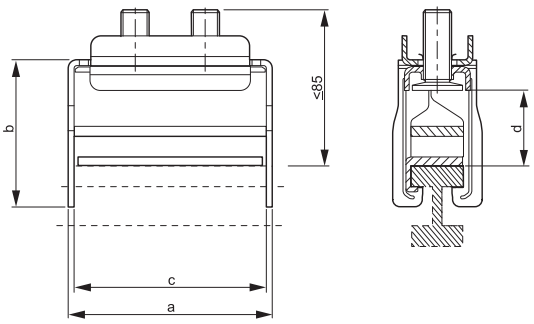

AKP800, AKP1000

Type	a (mm)	b (mm)	c (mm)
AKP800	118	72	41
AKP1000	103	94	64

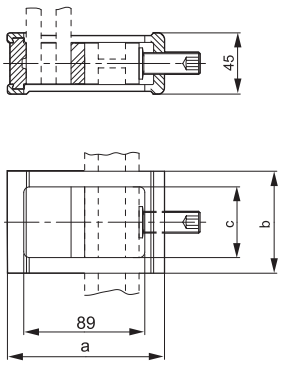

AKP750-AKP3600

Type	a (mm)	b (mm)	c (mm)	d (mm)
AKP750	82	103	51	5-28
AKP900	94	103	64	5-28
AKP1200	94	118	64	20-42
AKP1600	112	118	81	20-42
AKP2000	132	118	101	20-42
AKP3600	132	154	101	23-45

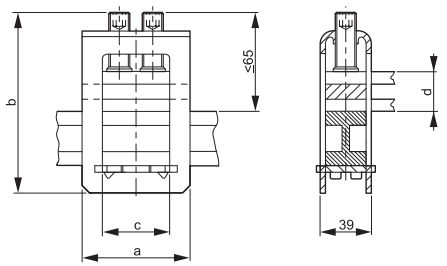

AKU16/5

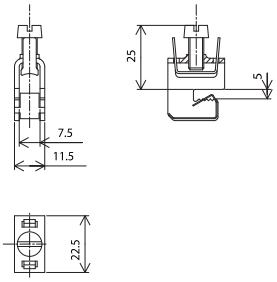

AKU35/5

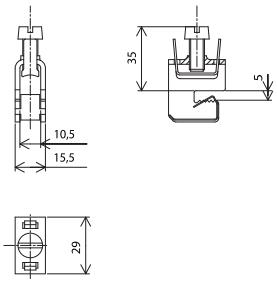

AKU70/5

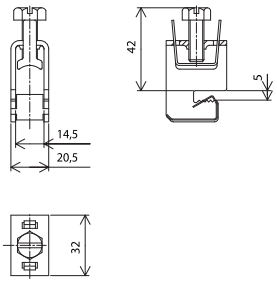

AKU120/5

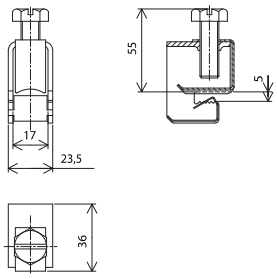

AKU16/10

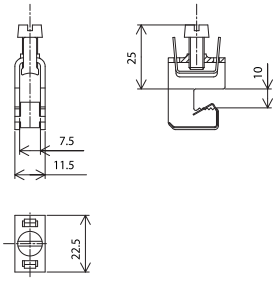

AKU35/10

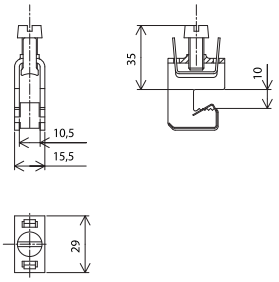

AKU70/10

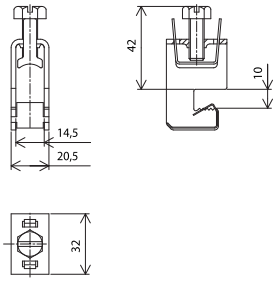

AKU120/10

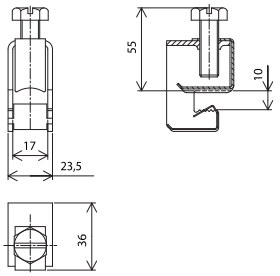

AKUM8/10

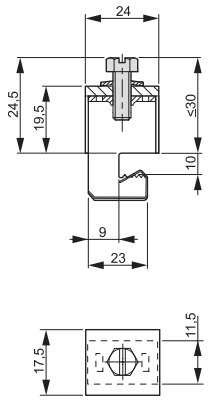

AKUM10/10

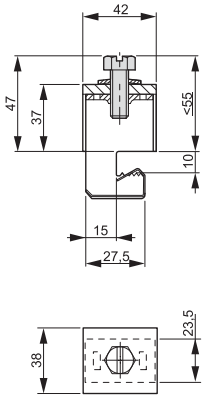

Busbar Connecting Terminals BBT-CU

For drill-free connection of identical types of busbars

Current carrying capacity of contact point	Overall length mm	Permissible misalignment of bars mm	Spacing between systems mm	Typ
630 A	150	1	100 - 110	BBT-CU12-20X5/10-150
630 A	95	5	50 - 60	BBT-CU20-30X5/10-95
630 A	150	5	100 - 110	BBT-CU20-30X5/10-150
1600 A	50	2	9 -20	BBT-CU-BAR500/720-50
1600 A	150	5	100 - 110	BBT-CU-BAR500/720-150

Dimensions

BBT-CU12-20X5/10-38

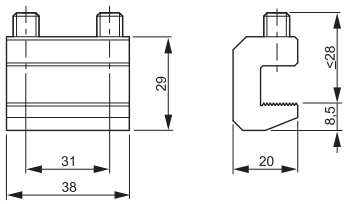

BBT-CU12-20X5/10-150

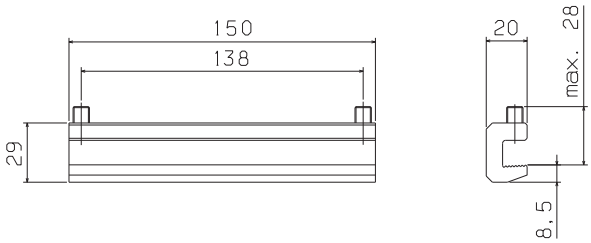

BBT-CU20-30X5/10-40

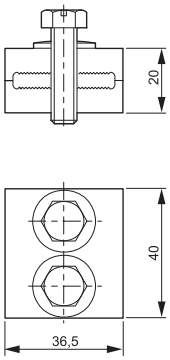

BBT-CU20-30X5/10-95

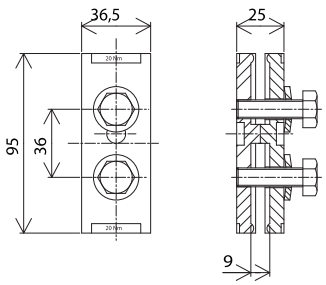

BBT-CU20-30X5/10-150

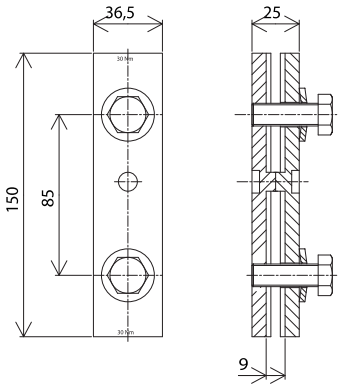

BBT-CU-BAR500/720-50

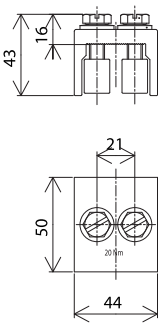

BBT-CU-BAR500/720-150

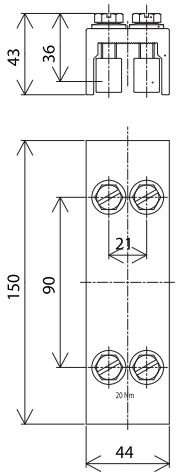

Busbar Adapter NZM

	NZM1-XAD160	NZM2-XAD250	NZM3-XAD630
Design	3-pole, 690 V~	3-pole, 690 V~	3-pole, 690 V~
Bar system	60 mm	60 mm	60 mm
Bar contacting	combi-base	claw-type terminal	claw-type terminal
Connection of the switchgear	top/bottom	top or bottom	top or bottom
Short circuit current rating SCCR	32 kA at 480 V	35 kA at 480 V 50 kA at 600 V	65 kA at 480 V 50 kA at 600 V

NZM1-XAD160

Base body:

Thermoplastic

Temperature resistant up to 120 °C

Self-extinguishing according to UL 94

Track resistance CTI 200

Halogen-free

Derating:

Ambient temperature	25	30	35	40	45	50	55
Permissible rated current	160	155	150	146	141	136	130
Derating to 160 A	1	0.97	0.94	0.91	0.88	0.85	0.81

NZM2-XAD250

Base body:

Thermoplastic

Temperature resistant up to 120 °C

Self-extinguishing according to UL 94

Track resistance CTI 200

Halogen-free

NZM3-XAD630

Base body:

Thermoplastic

Temperature resistant up to 120 °C

Self-extinguishing according to UL 94

Track resistance CTI 200

Halogen-free

Derating:

Ambient temperature	20	30	40	50	60	65	70
Permissible rated current	630	605	580	554	529	517	504
Derating to 630 A	1	0.96	0.92	0.88	0.84	0.82	0.80

Notes:
Please observe the de-rating cor.m.sicients listed in the table above to determine the maximum ampacity allowed at different ambient temperatures!

Example:
An NZM3...3-...630... device with an NZM3-XAD630 device adapter should be operated at an ambient temperature of 50 °C.

Question:
What is the maximum rated operating current Ie allowed I_e ? =>

Solution:
At an ambient temperature of 50 °C, the de-rating cor.m.sicient is 0.88. This means that I_e = 630 A x 0.88 = 544 A.
At an ambient temperature of 50 °C, the device can therefore be operated at a maximum of I_e = 544 A.

Dimensions

NZM1-XAD160

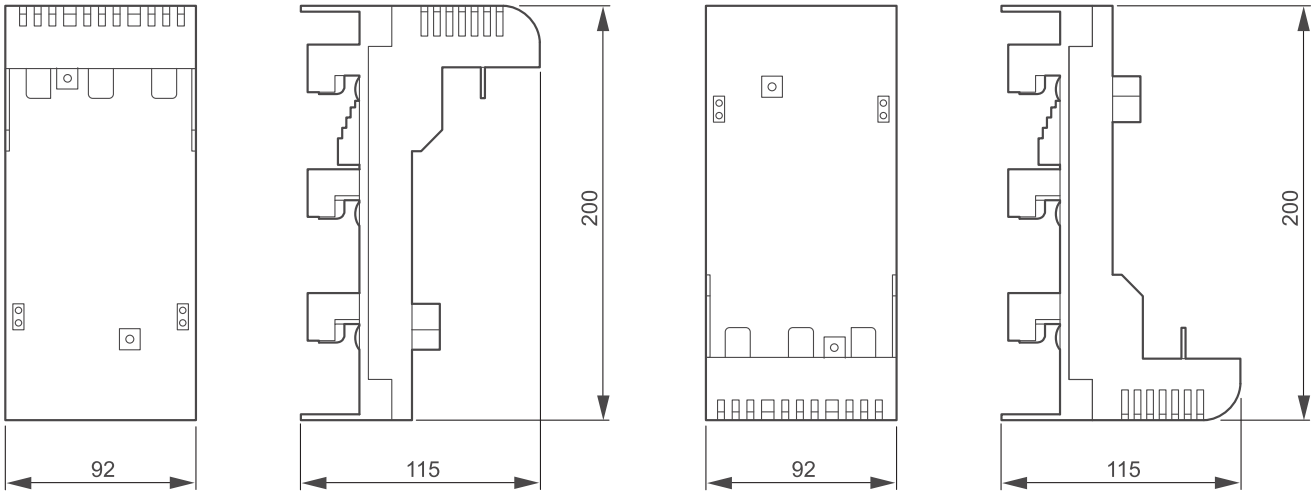

NZM2-XAD250

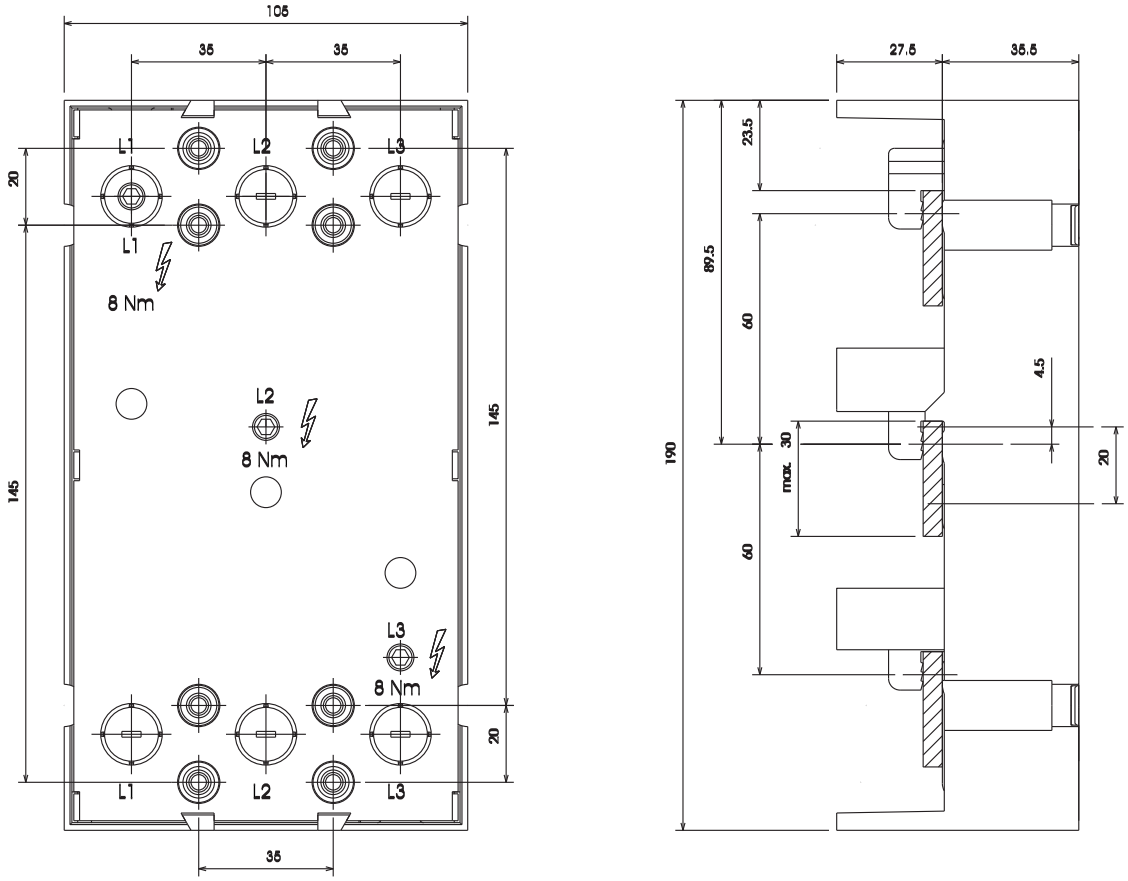

NZM3-XAD630

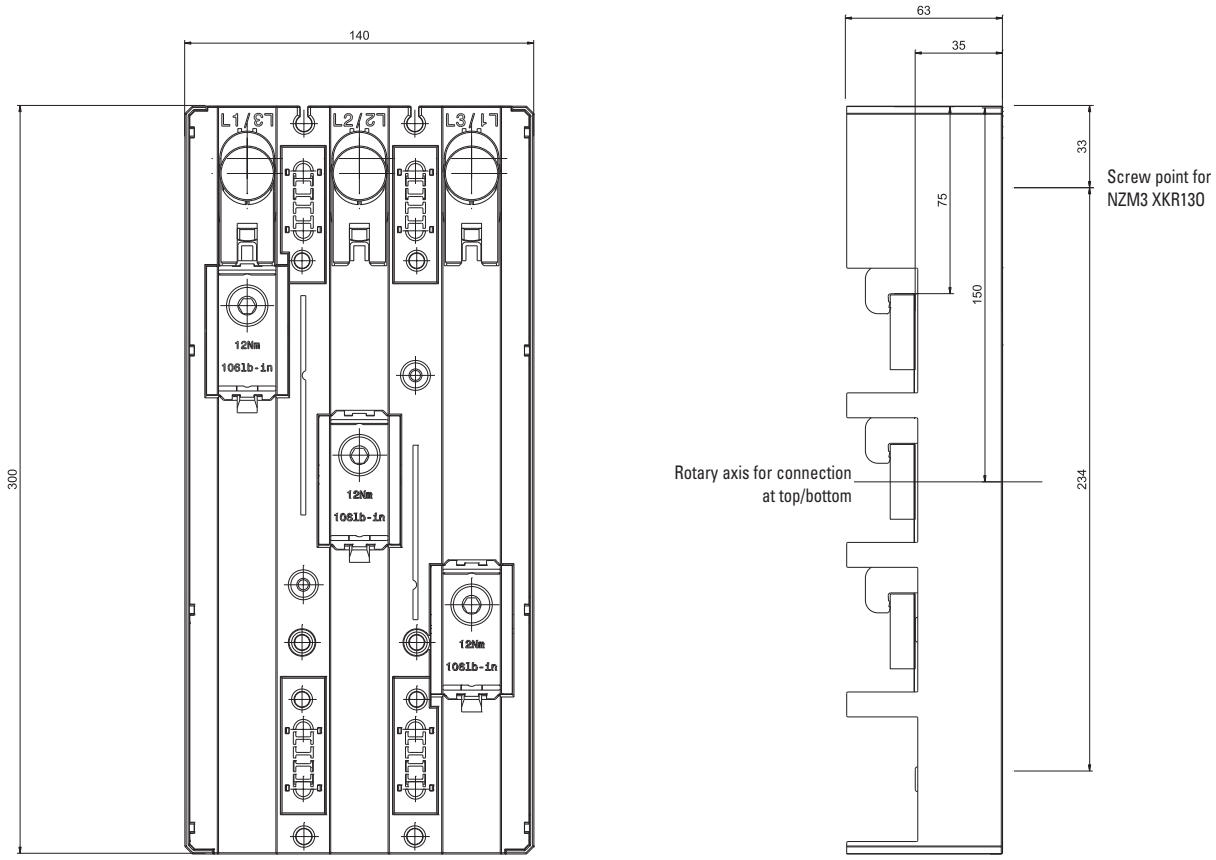

NZM2-4-XAD250

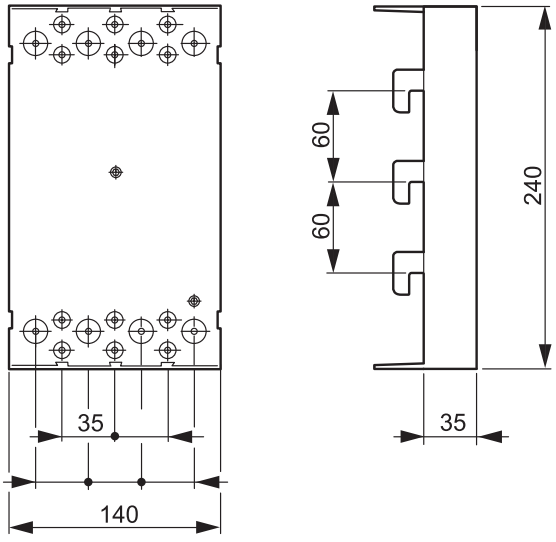

NZM3-4-XAD630

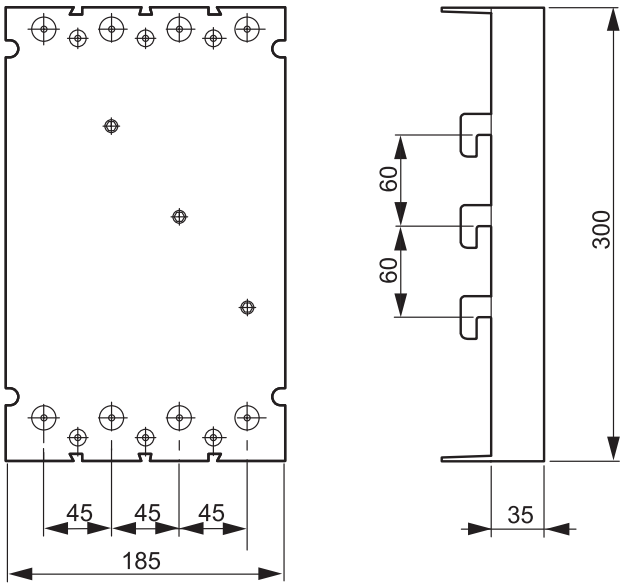

Busbar Adapter xStart BBA

	BBA
3-pole, 690 V~	
Can be used on all busbars in a 60 mm system.	
Thanks to the combi-base it is suitable for a thickness of both 5 and 10 mm.	
DIN EN 60715 support rail, plastic, can be adjusted on a 1.25 mm grid.	
Ultrasonically welded copper pipes	
Base body	
Silicone-free, chlorine-free	
Temperature resistant up to	120 °C
Self-extinguishing according to UL 94	according to UL 94
Track resistance	CTI 200
Support rail	
Silicone-free, chlorine-free	
Temperature resistant up to	100 °C
PVC conductor insulation	
Temperature resistant up to	105 °C
Overall length of the connecting cables	
BBA0-25, BBA0-32, BBA0R-25, BBA0R-32, BBA0-25/2TS, BBA0/2TS-L	93 mm
BBA0C-16, BBA0RC-16	125 mm
BBA4-63, BBA2-63, BBA4L-63, BBA2L-63	115 mm
Short circuit current rating SCCR	
PKZM0-0,16 to PKZM0-10	50 kA
PKZM0-12, -16	50 kA
PKZM0-20, -25, -32	18 kA
Direct and reverse motor starters PKZM0 + DILM[1)] or MSC + BBA up to 32 A on busbar adapters and busbar system SASY 60i	

[1)] any type of connection between PKZM and DILM

Dimensions

BBA0-25

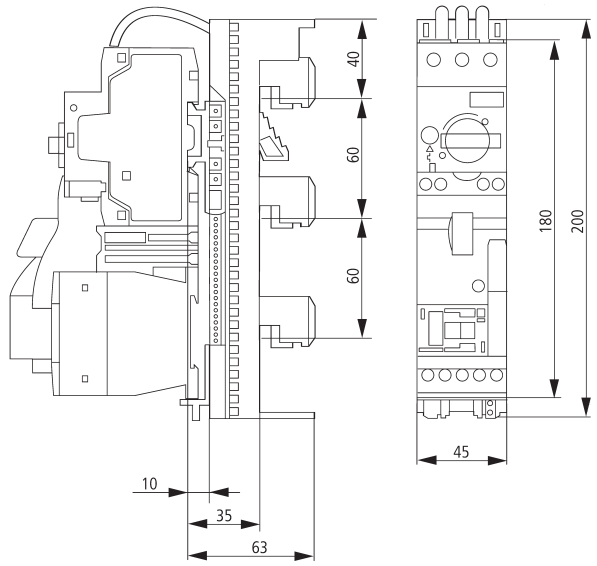

BBA0R-25

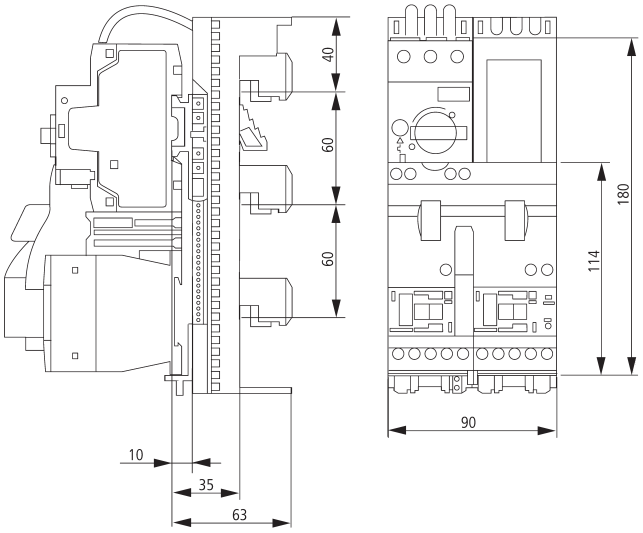

BBA0-32

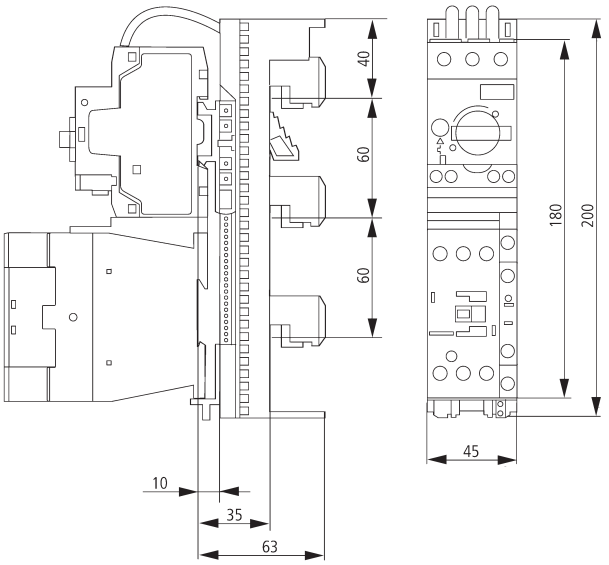

BBA0R-32

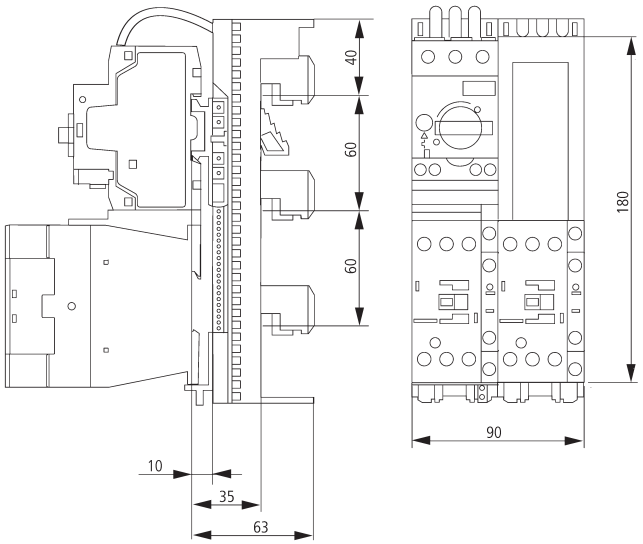

Z-SS-60-ADD/6...

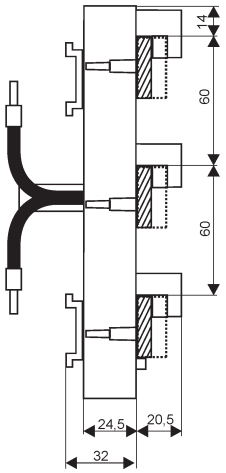

Technical Data D-Type Slide Fuse-Base

- Design according to IEC/EN 60269-1, VDE 0636 Part 301
- Vertical and horizontal mounting possible
- Delivered empty, without screw caps

		D02-SO/63/3-R-27 Z-D02/R/3...	DII-SO/25/3-R(-PS)	DIII-SO/63/3-R(-PS)
Electrical				
Number of poles		3	3	3
Rated operational voltage	U_e	400 V AC	500 V AC	690 V AC
Rated frequency		40-60 Hz	40-60 Hz	40-60 Hz
Rated operational current	I_e	63 A	25 A	63 A
Conventional thermal current with fuse-links	I_{th}	63 A	25 A	63 A
Rated duty		uninterrupted duty	uninterrupted duty	uninterrupted duty
Rated conditional short-circuit current		50 $kA_{r.m.s}$	50 $kA_{r.m.s}$	50 $kA_{r.m.s}$
Overvoltage category		IV	III	III
Rated impulse withstand voltage	U_{imp}	6 kV	4 kV	4 kV
Power loss per current path		0.5 W	0.4 W	3.34 W
Power loss of base without fuse-links		1.5 W	1.2 W	10 W
Max. permissible power loss of fuse-links		5.5 W	4 W	7 W
Mechanical				
Device height		201 mm	200 mm	200 mm
Width		27 mm	45 mm	54 mm
Weight		150 g	140 g	150 g
Mounting onto busbars, without drilling or screwing		12x5/10	12x5/10	12x5/10
		15x5/10	-	-
		20x5/10	20x5/10	20x5/10
		25x5/10	25x5/10	25x5/10
		30x5/10	30x5/10	30x5/10
Degree of protection while operating		IP20	IP20	IP20
Terminals		lift terminals	lift terminals	lift terminals
Terminal capacity		1.5-35 mm^2	1.5-25 mm^2	1.5-25 mm^2
Tightening torque of terminal screws		3-4 Nm	2.6 Nm	2.6 Nm
Electrical thread type		E18	E27	E33
Ambient temperature range		-25 to +55 °C	-25 to +55 °C *)	-25 to +55 °C *)
*) (35 °C normal temperature, at 55 °C with reduced operating current)				
Pollution degree		3	3	3
Climatic resistance: moist heat		constant according to IEC 60068-2-78, cyclical according to IEC 60068-2-30		

Technical Data Busbar-Slide Switch Disconnector with Fuses D02-S/63/3-RS

- Design according to IEC/EN 60947-3
- Vertical and horizontal mounting possible
- Delivered empty, without screw caps
- Current coding by means of cartridge-ring adapter insert
- Suitable for fuse-links
  D01: 2, 4, 6, 10, 16 A in combination with cartridge-ring adapter inserts Z-D02-D01/PE-.. and adapter spring Z-D02/SIKA-HF
  D02: 20, 25, 35, 50, 63 A
- Sealable

		D02-S/63/3-RS
Electrical		
Number of poles		3
Rated operational voltage	U_e	400 V AC
Rated frequency		40-60 Hz
Rated operational current	I_e	63 A
Conventional thermal current with fuse-links	I_{th}	63 A
Rated duty		uninterrupted duty
Rated conditional short-circuit current		50 $kA_{r.m.s}$
Utilization category		AC-23B
Overvoltage category		III
Rated impulse withstand voltage	U_{imp}	8 kV
Power loss per current path		2 W with I_e
Power loss per current path with fuse-link		7.5 W with I_e
Max. permissible power loss of fuse-links		5.5 W
Mechanical		
Device height		212 mm
Width		36 mm
Weight		260 g
Mounting onto busbars, without drilling or screwing		20x5/10 mm 30x5/10 mm
Degree of protection while operating		IP20
Terminals		lift terminals
Terminal capacity		1.5-25 mm^2 Cu
Tightening torque of terminal screws		max. 2.6 Nm
Electrical thread type		E18
Ambient temperature range		-25 to +55 °C
Pollution degree		3
Climatic resistance: moist heat		constant according to IEC 60068-2-78, cyclical according to IEC 60068-2-30

Connection diagram

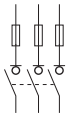

Technical Data Busbar-Slide Switch Disconnector with Fuses D02-LTS/63/3-R(-HK)

- Design according to IEC/EN 60947-3
- Vertical and horizontal mounting possible
- Supplied empty
- Current coding by means of cartridge-ring adapter insert
- Suitable for fuse-links
  D01: 2, 4, 6, 10, 16 A in combination with cartridge-ring adapter inserts Z-D02-D01/PE-.. and adapter spring Z-D02-LTS-HF
  D02: 20, 25, 35, 50, 63 A
  Cylindrical 10x38: 1 - 32 A
- Lead-seal- and lockable

		D02-LTS/63/3-R(-HK)
Electrical		
Number of poles		3
Rated operational voltage	U_e	400 V AC
Rated frequency		40-60 Hz
Rated operational current	I_e	63 A
Conventional thermal current with fuse-links	I_{th}	63 A
Rated duty		uninterrupted duty
Rated conditional short-circuit current		50 $kA_{r.m.s}$
Utilization category		AC-22B
Overvoltage category		IV
Rated impulse withstand voltage	U_{imp}	6 kV
Power loss per current path		1.5 W with I_e
Power loss per current path with fuse-link		7 W with I_e
Max. permissible power loss of fuse-links		5.5 W
Mechanical		
Device height		226 mm
Width		27 mm
Weight		340 g
Mounting onto busbars, without drilling or screwing		12x5/10 mm 15x5/10 mm 20x5/10 mm 25x5/10 mm 30x5/10 mm
Degree of protection while operating		IP20
Degree of protection built-in		IP40
Terminals		lift terminals
Terminal capacity		1.5-35 mm^2 Cu
Tightening torque of terminal screws		max. 4 Nm
Ambient temperature range		-25 to +55 °C
Pollution degree		3
Climatic resistance: moist heat		constant according to IEC 60068-2-78, cyclical according to IEC 60068-2-30
Auxiliary switch electrical		
1 CO		5 A / 250 V AC
Max. thermal back-up fuse		2 A gL PLSM-B4/..-HS / CLS6-B4/...-HS
Connection		
Femal push-on connector		2.8 x 0.5 mm

Connection diagram

D02-LTS/63/3-R

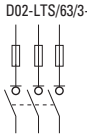

D02-LTS/63/3-R-HK

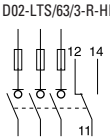

Dimensions

D02-SO/63/3-R-27

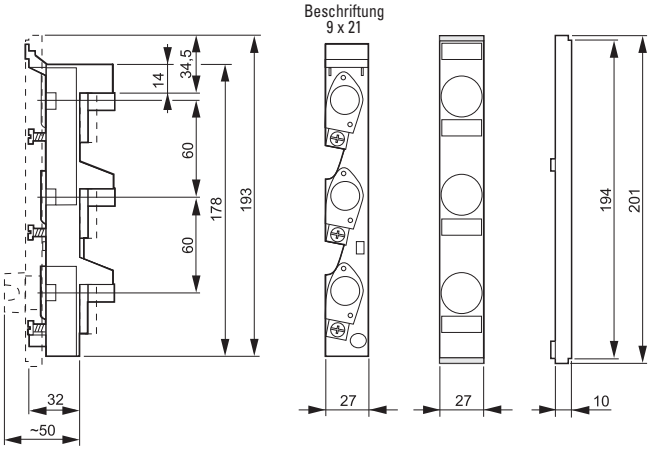

Front plate support

Z-D02/R/3-36, Z-D02/R/3-54

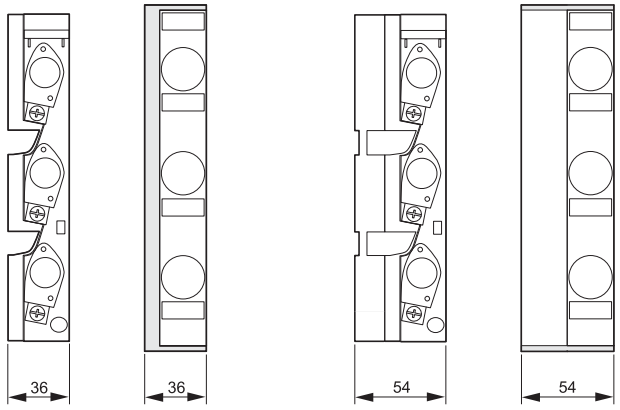

Front plate support

Z-D02-S-AB-SET

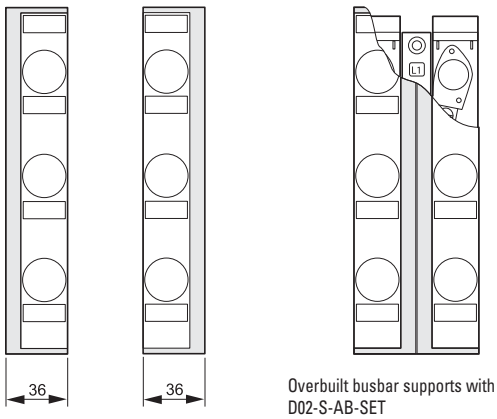

Front plate support

Overbuilt busbar supports with SetZ-D02-S-AB-SET

D...SO/.../3-R(-PS)

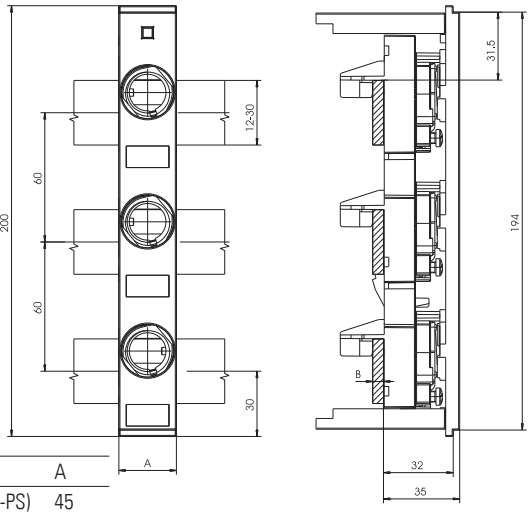

Type	A
DII-SO/25/3-R(-PS)	45
DIII-SO/63/3-R(-PS)	54

D02-S/63/3-RS

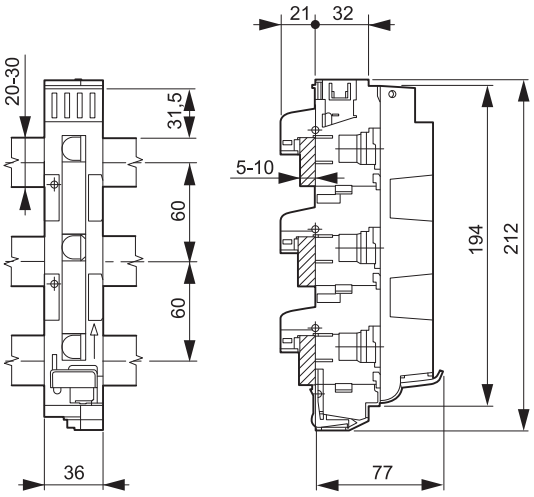

D02-LTS/63/3-R(-HK)

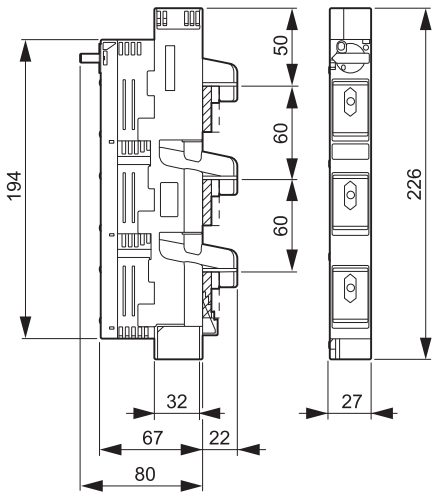

SASY 60i Busbar System

Fuse Switch Disconnectors XNH...

vt61615

vt64215

vt64015

vt61715

Description

- For fuse links NH000 to NH3
- Rated operating current of 160, 250, 400 and 630 A
- Sizes 00, 1, 2 and 3
- Degree of protection IP2XC
- Frame widths of 106, 184, 210 and 250 mm
- For busbar system of 60 mm
- System size 195 and 300 mm
- Can be locked with a pad lock
- Current-theft protection
- Flex-System for cable connection at the top/bottom
- Improved operator safety
- Flat connection for cable lug, box terminal, clamp-type terminal, prism terminal and double prism terminal
- Switch cover with safety parking position
- Fuse monitoring light with LED on the device
- Electronic fuse monitoring
- SmartWire-DT® option

vt64215

Fuse Switch Disconnectors XNH...

- Degree of protection IP2XC in operating mode
- According to IEC/EN 60947-3
- AC 690 V / DC 440 V
- Rated conditional short-circuit current 120 kA (500 V) and 100 kA (690 V)
- Reaction to fire according to UL 94, self-extinguishing
- Current paths of electrolytic copper, silver-plated
- For fixing on busbars of 60 mm (SASY 60i)
- Cable connection optionally at the top or bottom
- Fuse Control Light with optical signalling of triggered fuse-links
- Fuse Control FCE with electronic monitoring of fuse-links

Basic

3-pole for SASY 60i

vt61915

Size	I_e (A)	Type of connection	Type Designation	Article No.	Units per package
00	160	Flat connection M8 max. 95 mm²	XNH00-S160	183033	1
		Box terminal 1.5 - 95 mm²	XNH00-S160-BT1	183034	1
			XNH00-S160-BT2	183035	1
1	250	Flat connection M10 max. 150 mm²	XNH1-S250	183051	1
		Box terminal 35 - 150 mm²	XNH1-S250-BT	183052	1
2	400	Flat connection M10 max. 240 mm²	XNH2-S400	183065	1
		Box terminal 95 - 300 mm²	XNH2-S400-BT	183066	1
3	630	Flat connection M10 max. 300 mm²	XNH3-S630	183077	1
		Box terminal 95 - 300 mm²	XNH3-S630-BT	183078	1

Fuse Control Light

3-pole for SASY 60i

wa_vt14215

Size	I_e (A)	Type of connection	Type Designation	Article No.	Units per package
00	160	Flat connection M8 max. 95 mm²	XNH00-FCL-S160	183036	1
		Box terminal 1.5 - 95 mm²	XNH00-FCL-S160-BT1	183037	1
			XNH00-FCL-S160-BT2	183038	1
1	250	Flat connection M10 max. 150 mm²	XNH1-FCL-S250	183053	1
		Box terminal 35 - 150 mm²	XNH1-FCL-S250-BT	183054	1
2	400	Flat connection M10 max. 240 mm²	XNH2-FCL-S400	183067	1
		Box terminal 95 - 300 mm²	XNH2-FCL-S400-BT	183068	1
3	630	Flat connection M10 max. 300 mm²	XNH3-FCL-S630	183079	1
		Box terminal 95 - 300 mm²	XNH3-FCL-S630-BT	183080	1

Fuse Control FCE

3-pole for SASY 60i

vt03016

Size	I_e (A)	Type of connection	Type Designation	Article No.	Units per package
00	160	Flat connection M8 max. 95 mm²	XNH00-FCE-S160	183039	1
		Box terminal 1.5 - 95 mm²	XNH00-FCE-S160-BT1	183040	1
			XNH00-FCE-S160-BT2	183041	1
1	250	Flat connection M10 max. 150 mm²	XNH1-FCE-S250	183055	1
		Box terminal 35 - 150 mm²	XNH1-FCE-S250-BT	183056	1
2	400	Flat connection M10 max. 240 mm²	XNH2-FCE-S400	183069	1
		Box terminal 95 - 300 mm²	XNH2-FCE-S400-BT	183070	1
3	630	Flat connection M10 max. 300 mm²	XNH3-FCE-S630	183081	1
		Box terminal 95 - 300 mm²	XNH3-FCE-S630-BT	183082	1

1-pole for SASY 60i

Size	I_e (A)	Type of connection	Type Designation	Article No.	Units per package
00	160	Flat connection M8 max. 95 mm²	XNH00-1-S160	183042	1

Description	Suitable for size	Type Designation	Article No.	Units per package

SmartWire-DT®, Module Kit

- XNH...-SDW-KIT: Consisting of SWD module, ready-made cables and additional cover for cable area
- Only in connection with Fuse Control FCE
- XNH...-SDW-KIT-EXT: Consisting of SWD module, mounting element for mounting plate, mini cable channel and contact plug

vt00417

SWD module with 2 digital inputs for switch position indication and trip signal. Complete set for direct mounting at the switchgear.	00 with FCE	XNH00-SWD-KIT	183083	1
	1 with FCE	XNH1-SWD-KIT	183084	1
	2 with FCE	XNH2-SWD-KIT	183085	1
	3 with FCE	XNH3-SWD-KIT	183086	1
SWD module with 2 digital inputs for switch position indication and trip signal and 3 analog inputs for current measurement. For fixing on the mounting plate.	00 with FCE	XNH00-SWD-KIT-EXT	183087	1
	1/2/3 with FCE	XNH123-SWD-KIT-EXT	183088	1

Cover for connection area, 3-pole

vt09816

Cable entries can be knocked out as required. 36, 42 and 66 mm length for top and bottom. Multiple use per device is possible.	00	XNH00-XKSA-36	183091	2
		XNH00-XKSA-66	183092	2
	1	XNH1-XKSA-42	183093	2
	2	XNH2-XKSA-42	183094	2
	3	XNH3-XKSA-42	183095	2

Extension for cover of connection area, 3-pole for SASY 60i

vt10016

Can be fixed at the top or bottom of the device. 32 or 39 and 34 mm distance to the base plate.	00	XNH00-XKSV-39-34	183096	2
		XNH00-XKSV-32	183097	2

Reach-over protection, 3-pole for SASY 60i

- Can be fixed at the top or bottom of the device
- For 32 or 39 and 34 mm distance to the base plate

vt09916

For flat connection or box terminal	00	XNH00-XKSS-39-34	183098	2
		XNH00-XKSS-32	183099	2
For BT2 box terminal	00	XNH00-XKSS-BT-39-34	183100	2
		XNH00-XKSS-BT-32	183101	2
For flat connection or box terminal	1	XNH1-XKSS-39-34	183102	2
		XNH1-XKSS-32	183103	2
	2	XNH2-XKSS-39-34	183104	2
		XNH2-XKSS-32	183105	2
	3	XNH3-XKSS-39-34	183106	2
		XNH3-XKSS-32	183107	2

Current-theft protection

vt10916

For manipulation-protected blocking of the inspection window	00, 1, 2, 3	XNH-XSECUR	183113	1 Set

Note: 1 set includes current-theft protection for a 3-pole XNH.

Locking device

vt11016

For locking with a padlock when using a closed XNH disconnector	00, 1, 2, 3	XNH-XLOCK	182993	1

Note: Padlock with a shackle diameter of 6 mm max.

	Description	Suitable for size	Type Designation	Article No.	Units per package
	Device locking with sign				
vt11116	For keyless locking of the XNH switching devices in combination with XNH-XLOCK. Language German.	00, 1, 2, 3	XNH-XLDG-G	184805	5
	Internal lock for contact-protection				
wa_vt15815	Tool-requiring lock of internal contact protection covers	00, 1, 2, 3	XNH-XLATCH	182992	1
	Switch position indicator				
vt67815	1 change-over contact, AC 250 V, 10/3 A	00	XNH00-XPOS	182995	1
		1, 2, 3	XNH123-XPOS	182996	1
	Mechanical fuse monitoring				
vt67915	1 change-over contact, AC 250 V, 10/3 A	00	XNH00-XMFM	182997	3
		1, 2, 3	XNH123-XMFM	182998	3
	Note: Only in combination with NH fuse links equipped with a striker pin. Not for use in combination with box terminal or double-prism terminals.				
	Conncection kit, 2- and 4-pole				
vt00517	To mechanically connect 2x 1-pole or 3-pole and 1-pole XNH disconnectors	00, 1, 3/(2)	XNH-XLINK	182999	1

Connection technology

Clamp-type terminal

vt68215

Description	Suitable for size	Type Designation	Article No.	Units per package
1.5 - 50 mm², Cu	00	XNH00-XCT	183002	3
25 - 150 mm², Cu	1	XNH1-XCT	183003	3
25 - 240 mm², Cu	2	XNH2-XCT	183004	3
CU-BAND-11x21x1	3	XNH3-XCT	183005	3

Prism terminal

vt67515

10 - 70 mm², Cu/Al	00	XNH00-XPRC	183006	3
70 - 150 mm², Cu/Al	1	XNH1-XPRC	183007	3
120 - 240 mm², Cu/Al	2	XNH2-XPRC	183008	3
120 - 300 mm², Cu/Al	3	XNH3-XPRC	183009	3

Double-prism terminal

vt67315

2 x 70 - 95 mm², Cu/Al	1	XNH1-X2PRC	183010	3
2 x 120 - 150 mm², Cu/Al	2	XNH2-X2PRC	183011	3
2 x 120 - 240 mm², Cu/Al	3	XNH3-X2PRC	183012	3

Box terminal

vt68615

35 - 150 mm², Cu/Al	1	XNH1-BT	183000	3
95 - 300 mm², Cu/Al	2, 3	XNH23-BT	183001	3

HNote: Box terminal and double-prism terminal not for use in combination with mechanical fuse monitoring XNH...-XMFM.

Spare handle cover, 3-pole

vt08016

Cover for XNH disconnector Basic	00	XNH00-XGRIP	183013	1
	1	XNH1-XGRIP	183014	1
	2	XNH2-XGRIP	183015	1
	3	XNH3-XGRIP	183016	1

vt08116

Cover for XNH disconnector with Fuse Control FCL	00	XNH00-XGRIP-FCL	183017	1
	1	XNH1-XGRIP-FCL	183018	1
	2	XNH2-XGRIP-FCL	183019	1
	3	XNH3-XGRIP-FCL	183020	1

vt08216

Cover for XNH disconnector with Fuse Control FCE	00	XNH00-XGRIP-FCE	183021	1
	1	XNH1-XGRIP-FCE	183022	1
	2	XNH2-XGRIP-FCE	183023	1
	3	XNH3-XGRIP-FCE	183024	1

Note: FCL and FCE can only be used with fuse links equipped with live handle straps.

Technical Data

Replacing NH fuses or any other activities (such as installation, operation etc. …) on NH fuse switch disconnectors may be carried out by electro-technically qualified and specialized staff only. Power-related data provided by the manufacturer, e.g. max. rated make and break capacities, must be taken into account. Non-qualified employees are not authorized to install or operate such products as they cannot foresee the consequences of their actions. General regulations (e.g. safety regulations, protective clothing …) and regional requirements (e.g. for accident prevention on electrical systems and operating resources) must at all times be respected.

		XNH00…-S160…	**XNH1…-S250…**
Standard		IEC/EN 60947-3	IEC/EN 60947-3
NH fuses[1] according to DIN VDE 0636-2		000 / 00	1
Rated operational voltage	U_e	690 V AC, 440 V DC	690 V AC, 440 V DC
Rated operational current	I_e	160 A	250 A
Rated frequency	f	40 - 60 Hz	40 - 60 Hz
Rated insulation voltage	U_i	800 V AC	800 V AC
Total power loss at I_{th} (without fuses)	P_v	14 W	22 W
Power loss at 80% (without fuses)	P_v	9 W	14.1 W
Rated impulse withstand voltage	U_{imp}	8 kV	8 kV
Utilization category		AC-23B (400 V / 160 A)	AC-23B (400 V / 250 A)
		AC-22B (500 V / 160 A)	AC-22B (500 V / 250 A)
		AC-21B (690 V / 160 A)	AC-21B (690 V / 250 A)
		DC-22B (250 V / 160 A)	DC values on request
		DC-21B (440 V / 160 A)	
Rated conditional short-circuit current		120 kA (500 V)	120 kA (500 V)
		100 kA (690 V)	100 kA (690 V)
Rated short-time withstand current	I_{cw}	77 kA	10 kA
Max. permitted power loss per fuse link	P_{NH}	12 W	23 W
Degree of protection - front (XNH installed)		operating status IP20	operating status IP20
		contact protection IP2XC	contact protection IP2XC
		handle cover open IP10	handle cover open IP10
Ambient temperature	T_{35}	-25 to +55 °C	-25 to +55 °C
Rated duty		uninterrupted duty	uninterrupted duty
Activation		dependent manual activation	dependent manual activation
Fitting position		vertical/horizontal	vertical/horizontal
Altitude		max. 2000 m	max. 2000 m
Pollution degree		3	3
Overvoltage category		III	III
Colour		grey	grey
RoHs		yes	yes
Energy feeder direction		any (FLEX System)	any (FLEX System)
Lockable		yes, optional	yes, optional
Sealable		yes, standard	yes, standard
Material		Polyamide	Polyamide
Reaction to fire		self-extinguishing according to UL94	self-extinguishing according to UL94
Halogen-free		yes	yes
Voltage test		yes, sliding inspection windows	yes, sliding inspection windows
Electrical service life		300 operating cycles	200 operating cycles
Mechanical service life		1400 operating cycles	1400 operating cycles
Track resistance		CTI 600	CTI 600
Temperature resistance		up to 125 °C	up to 125 °C
Terminal capacities			
Flat connection			
Bolt diameter		M8	M10
Cable lug max. width		25 mm	37 mm
Flat rail		20x10 mm	30x10 mm
Box terminal			
multi-wire		1.5 - 95 mm^2 Cu	35 - 150 mm^2 Cu/Al
Cu-Band		9x9x0.8 mm	10x16x0.8 mm
Clamp-type terminal			
multi-wire		1.5 - 50 mm^2 Cu	25 - 150 mm^2 Cu
Cu-Band		6x9x0.8 mm	6x16x0.8 mm
Prism terminal			
multi-wire		10 - 70 mm^2 Cu/Al	10 - 150 mm^2 Cu/Al
Double-prism terminal			
multi-wire		–	2x (70 - 95) mm^2 Cu/Al

Note: Please leave a minimum distance to grounded live parts: Side = 20 mm, top = 50 mm.
Exception DC-21B: Seitlich = 50 mm, top = 100 mm (valid for XNH00…).

[1] Type-tested with NH fuse links of characteristic gG. Safety control FCE and FCL only in combination with NH fuses equipped with live handle straps.

Technical Data

Replacing NH fuses or any other activities (such as installation, operation etc. …) on NH fuse switch disconnectors may be carried out by electro-technically qualified and specialized staff only. Power-related data provided by the manufacturer, e.g. max. rated make and break capacities, must be taken into account. Non-qualified employees are not authorized to install or operate such products as they cannot foresee the consequences of their actions. General regulations (e.g. safety regulations, protective clothing …) and regional requirements (e.g. for accident prevention on electrical systems and operating resources) must at all times be respected.

		XNH2…-S400…	**XNH3…-S630…**
Standard		IEC/EN 60947-3	IEC/EN 60947-3
NH fuses[1] according to DIN VDE 0636-2		2	3 / 2
Rated operational voltage	U_e	690 V AC, 440 V DC	690 V AC, 440 V DC
Rated operational current	I_e	400 A	630 A
Rated frequency	f	40 - 60 Hz	40 - 60 Hz
Rated insulation voltage	U_i	800 V AC	800 V AC
Total power loss at I_{th} (without fuses)	P_v	36 W	86 W
Power loss at 80% (without fuses)	P_v	22.9 W	54.8 W
Rated impulse withstand voltage	U_{imp}	8 kV	8 kV
Utilization category		AC-23B (400 V / 400 A)	AC-23B (400 V / 630 A)
		AC-22B (500 V / 400 A)	AC-22B (500 V / 630 A)
		AC-21B (690 V / 400 A)	AC-21B (690 V / 630 A)
		DC values on request	DC values on request
Rated conditional short-circuit current		120 kA (500 V)	120 kA (500 V)
		100 kA (690 V)	100 kA (690 V)
Rated short-time withstand current	I_{cw}	10 kA	10 kA
Max. permitted power loss per fuse link	P_{NH}	34 W	48 W
Degree of protection - front (XNH installed)		operating status IP20	operating status IP20
		contact protection IP2XC	contact protection IP2XC
		handle cover open IP10	handle cover open IP10
Ambient temperature	T_{35}	-25 to +55 °C	-25 to +55 °C
Rated duty		uninterrupted duty	uninterrupted duty
Activation		dependent manual activation	dependent manual activation
Fitting position		vertical/horizontal	vertical/horizontal
Altitude		max. 2000 m	max. 2000 m
Pollution degree		3	3
Overvoltage category		III	III
Colour		grey	grey
RoHs		yes	yes
Energy feeder direction		any (FLEX System)	any (FLEX System)
Lockable		yes, optional	yes, optional
Sealable		yes, standard	yes, standard
Material		Polyamide	Polyamide
Reaction to fire		self-extinguishing according to UL94	self-extinguishing according to UL94
Halogen-free		yes	yes
Voltage test		yes, sliding inspection windows	yes, sliding inspection windows
Electrical service life		200 operating cycles	200 operating cycles
Mechanical service life		800 operating cycles	800 operating cycles
Track resistance		CTI 600	CTI 600
Temperature resistance		up to 125 °C	up to 125 °C
Terminal capacities			
Flat connection			
Bolt diameter		M10	M10
Cable lug max. width		48 mm	56 mm
Flat rail		40x10 mm	50x10 mm
Box terminal			
multi-wire		95 - 300 mm^2 Cu	95 - 300 mm^2 Cu
Cu-Band		6x16x0.8 to 10x32x1 mm	6x16x0.8 to 10x32x1 mm
Clamp-type terminal			
multi-wire		25 - 240 mm^2 Cu	on request
Cu-Band		10x16x0.8 mm	11x21x1 mm
Prism terminal			
multi-wire		120 - 240 mm^2 Cu/Al	120 - 300 mm^2 Cu/Al
Double-prism terminal			
multi-wire		2x (120 - 150) mm^2 Cu/Al	2x (120 - 240) mm^2 Cu/Al

Note: Please leave a minimum distance to grounded live parts: Side = 20 mm, top = 50 mm.

[1] Type-tested with NH fuse links of characteristic gG. Safety control FCE and FCL only in combination with NH fuses equipped with live handle straps.

Connection of laminated copper band (CU-BAND...) to XNH fuse switch disconnectors with box terminal BT

Number of layers	x	Width	x	Thickness of layers	=	Cross-section (mm^2)	Hight copper band (mm)	max. Rated operational current (A)	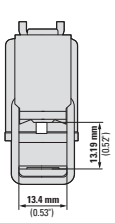	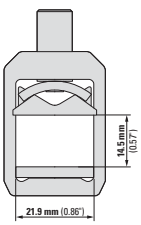	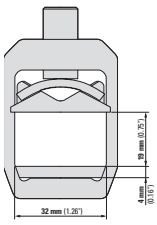	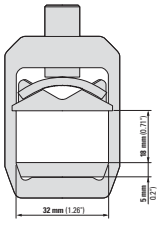
									XNH00...-BT	**XNH1...-BT**	**XNH2...-BT**	**XNH3...-BT**
3	x	9	x	0.8	=	21.6	2.4	100	●	●	-	-
6	x	9	x	0.8	=	43.2	4.8	160	●	●	-	-
9	x	9	x	0.8	=	64.8	7.2	200	●	●	-	-
6	x	16	x	0.8	=	74.4	4.65	250	-	●	●	●
10	x	16	x	0.8	=	124	7.75	400	-	●	●	●
5	x	24	x	1.0	=	120	5	400	-	-	●	●
11	x	21	x	1.0	=	231	11	630	-	-	●	●
8	x	24	x	1.0	=	192	8	630	-	-	●	●
10	x	24	x	1.0	=	240	10	630	-	-	●	●
5	x	32	x	1.0	=	160	5	160	-	-	●	●
10	x	32	x	1.0	=	320	10	800	-	-	●	●
10	x	40	x	1.0	=	400	10	1000	-	-	-	-
10	x	50	x	1.0	=	500	10	1250	-	-	-	-
10	x	80	x	1.0	=	800	10	1600	-	-	-	-

Technical Data Fuse Control FCE

	XNH...FCE...
Power supply	self-supplied
Power consumption	1.5 VA
Overvoltage category	
230/400 V	III
500 V	II
Frequency range	50 - 60 Hz
Input resistance	>1 kOhm/V
Voltage inputs	400 - 500 V AC (+/-10%)
Temperature range	-5 to +55 °C
Operation indicator	1 LED green
Failure indicator	3 LEDs (F1, F2, F3) rot
Degree of protection	IP3X
Function test	Test button for relay + LEDs
EMC	IEC 61000-4-5 / IEC 61000-4-4
Fuse links inserts	NH with live handle straps
Outputs	
Relay output	1 NC, 1 NO
Max. voltage	250 V AC / 24 V DC
Max. switching current	1 A

Note: Not suitable for single-phase application!

Connection diagram

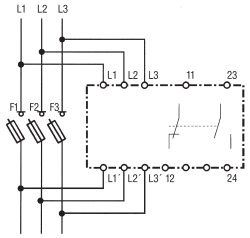

Function diagram

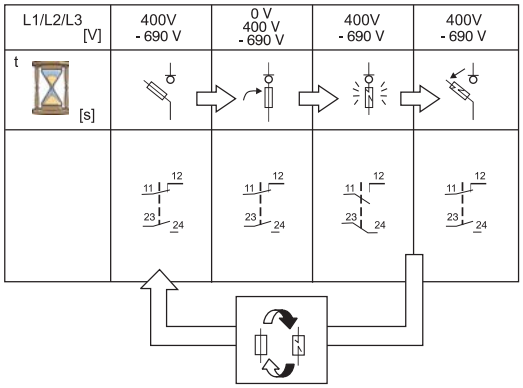

Dimensions

XNH00-S160..., XNH00-FCL-S160, XNH00-FCL-S160-BT1

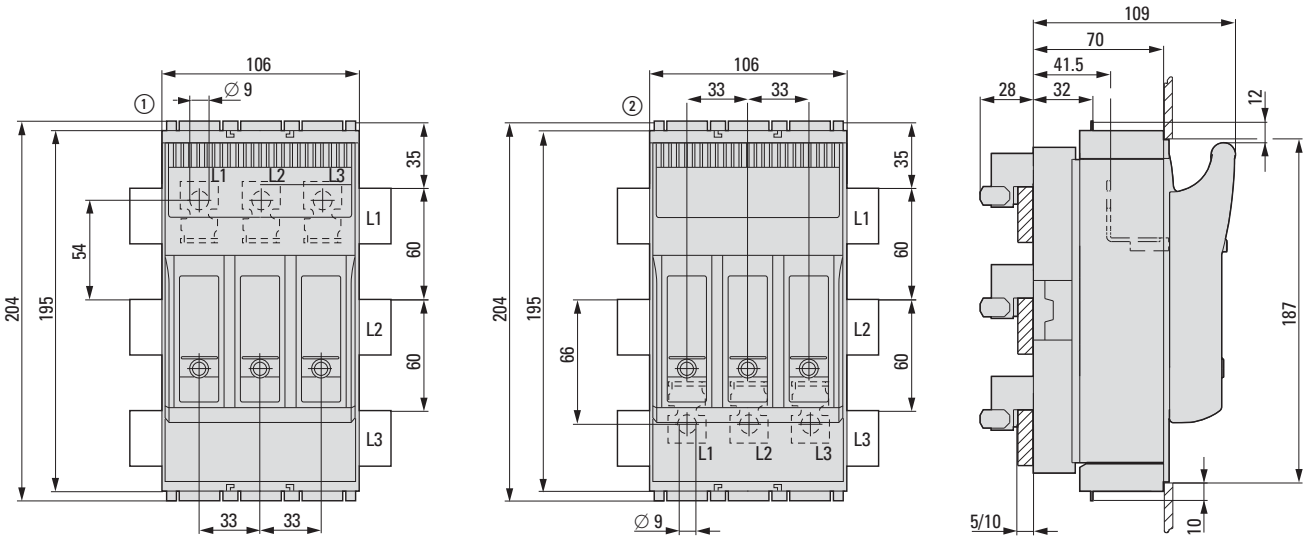

1230DIM-362

XNH00-FCL-S160-BT2

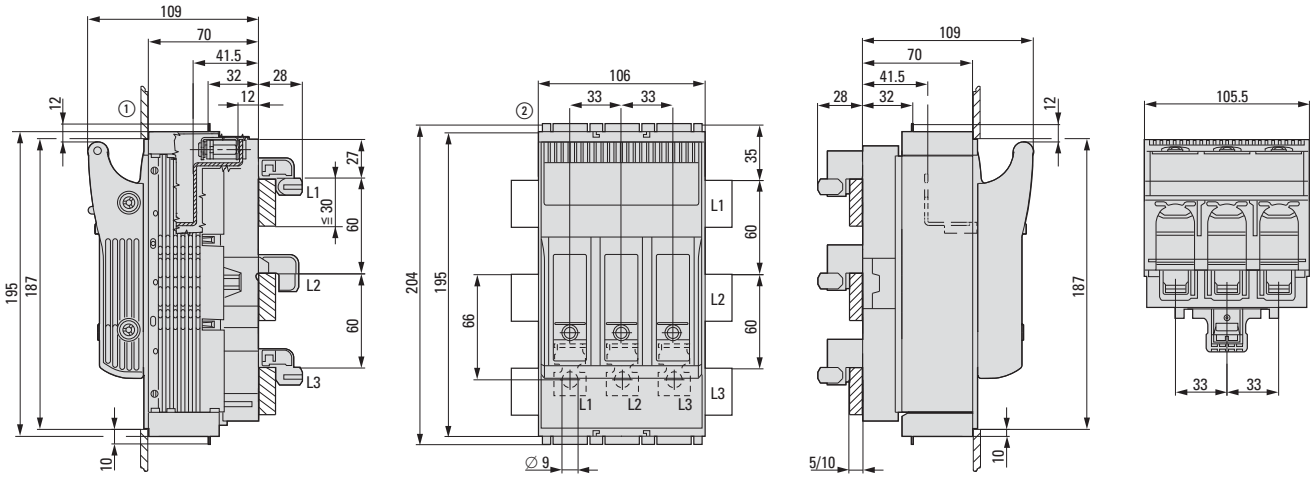

1230DIM-363

XNH00-FCE-S160...

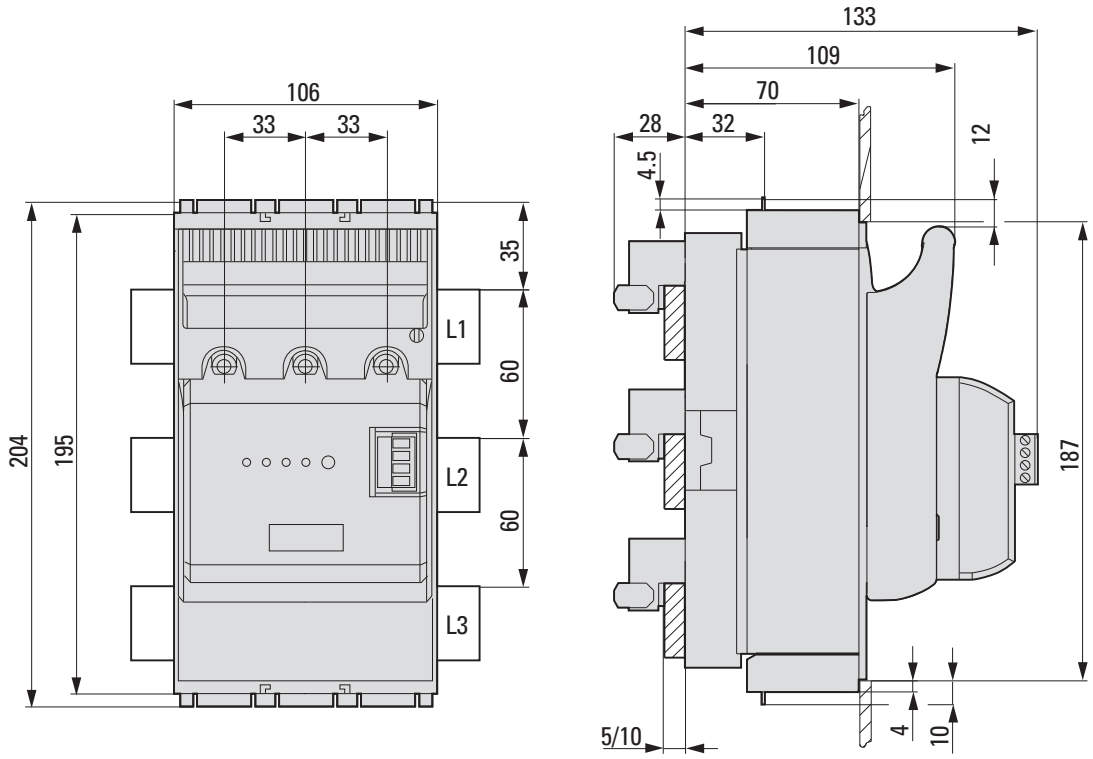

1230DIM-364

XNH00-1-S160

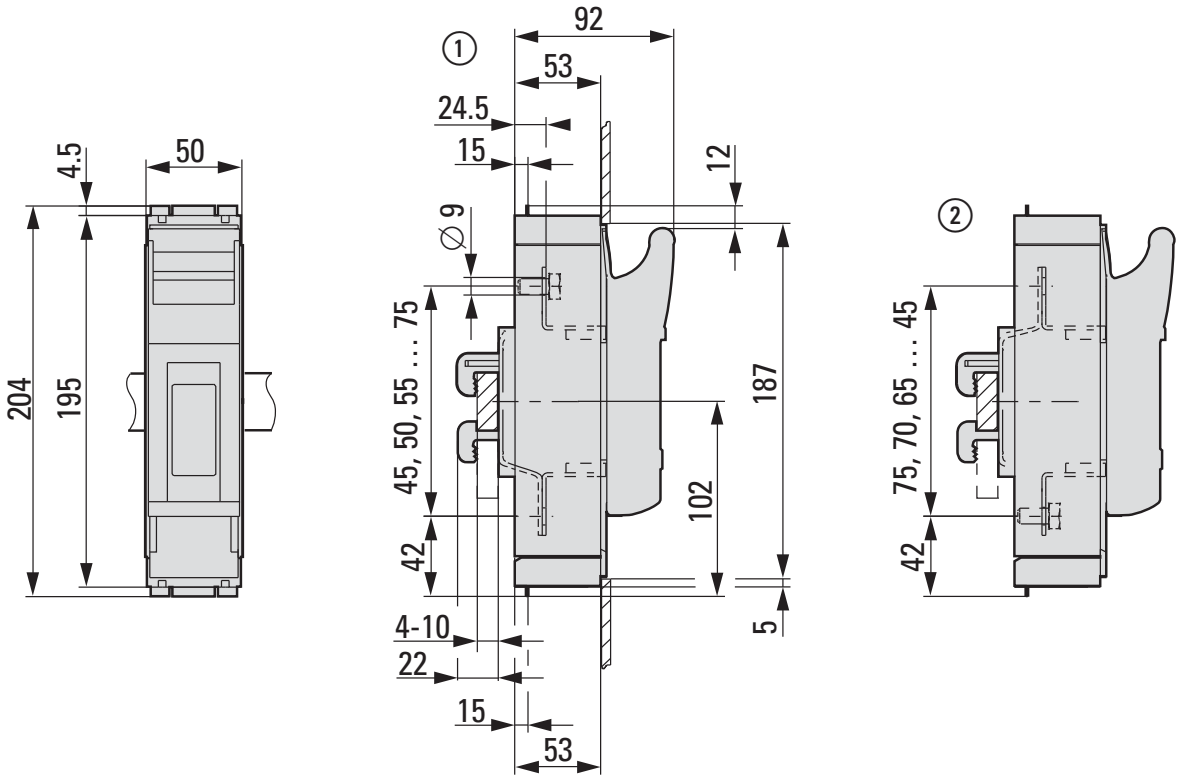

1230DIM-375

XNH1-S250..., XNH1-FCL-S250...

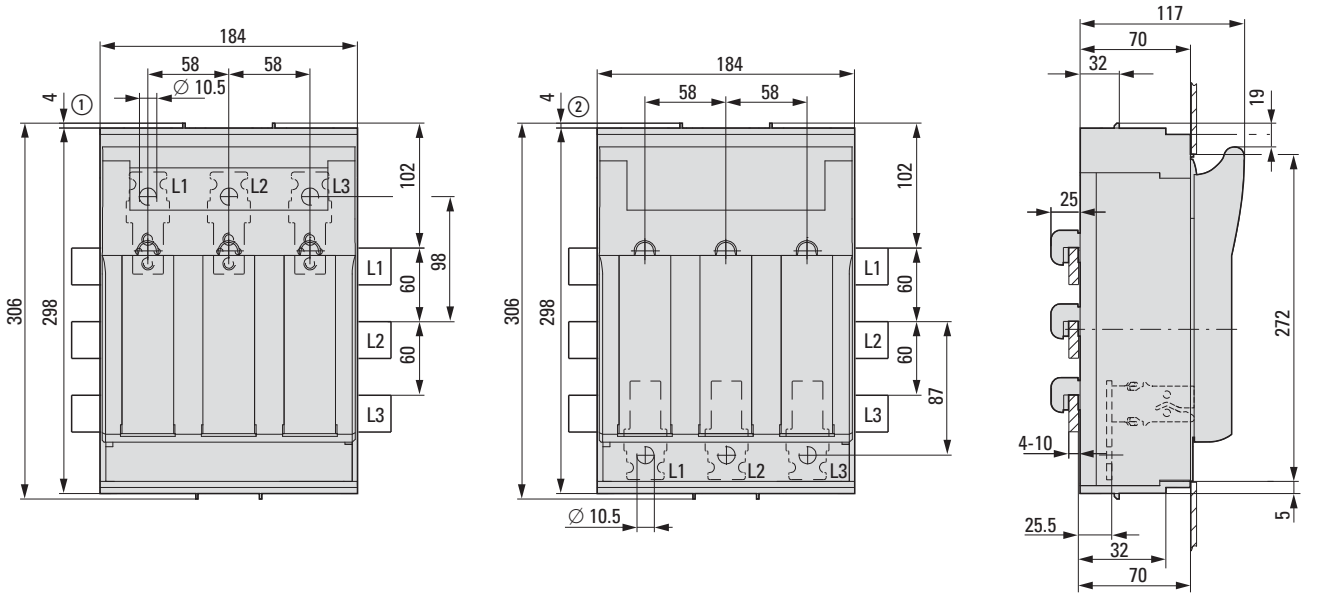

1230DIM-366

XNH1-FCE-S250...

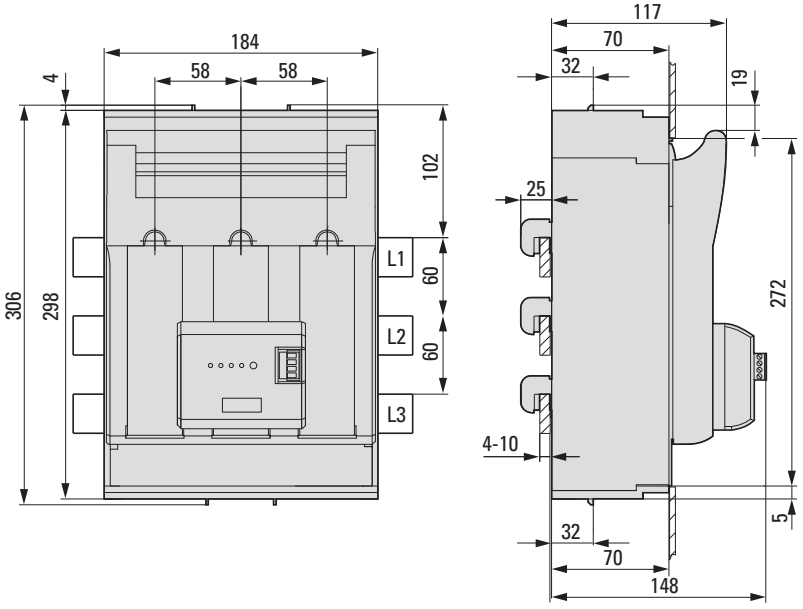

1230DIM-370

XNH2-S400..., XNH2-FCL-S400...

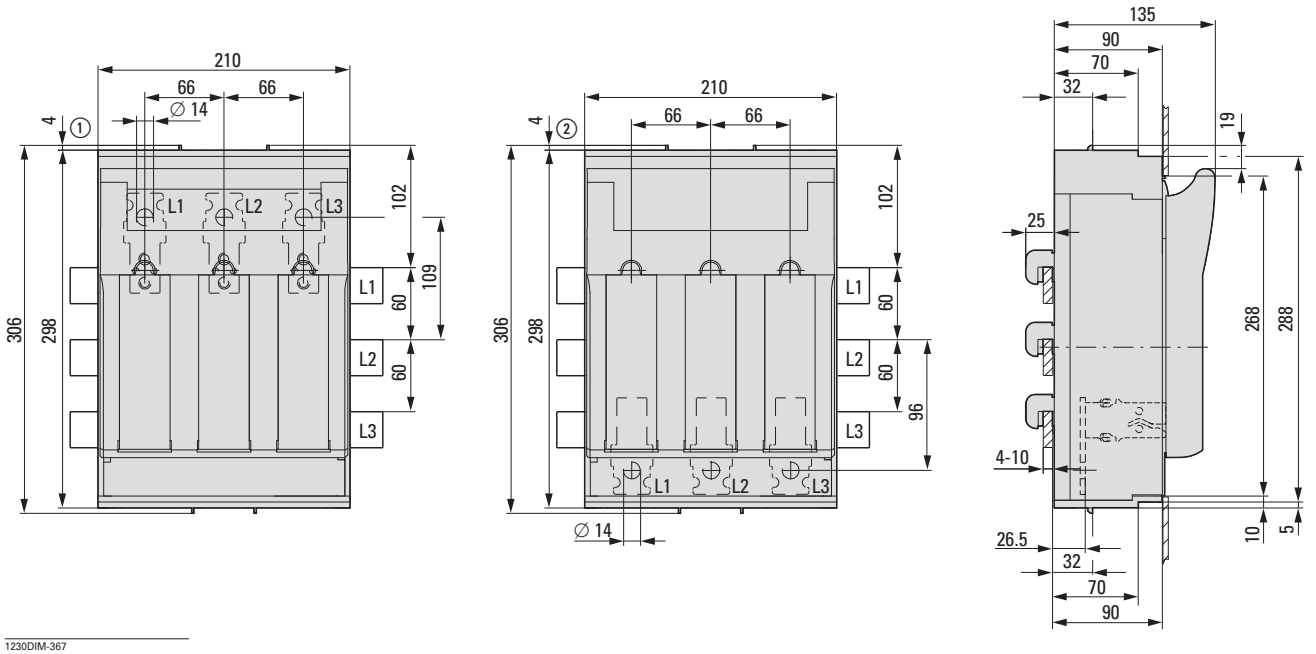

1230DIM-367

XNH2-FCE-S400...

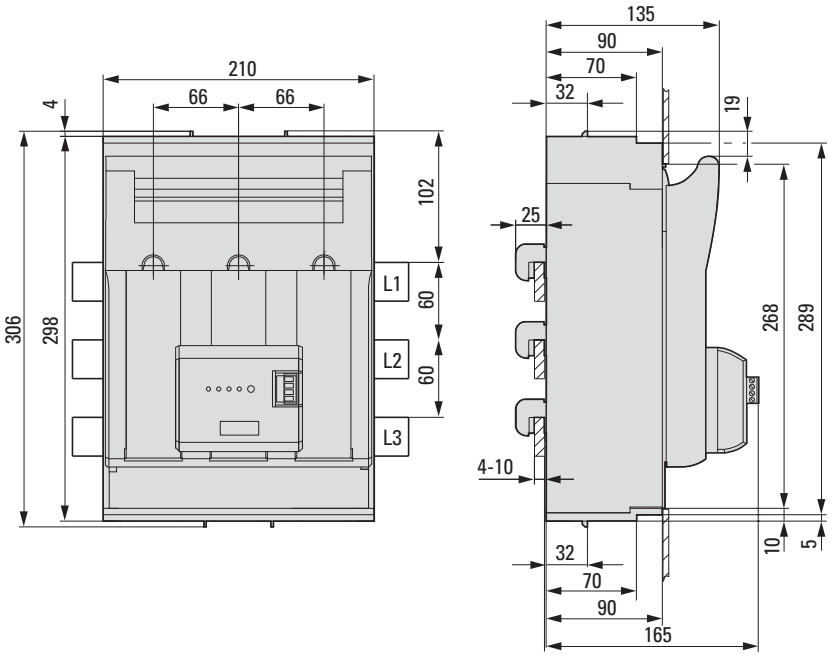

1230DIM-371

XNH3-S630..., XNH3-FCL-S630...

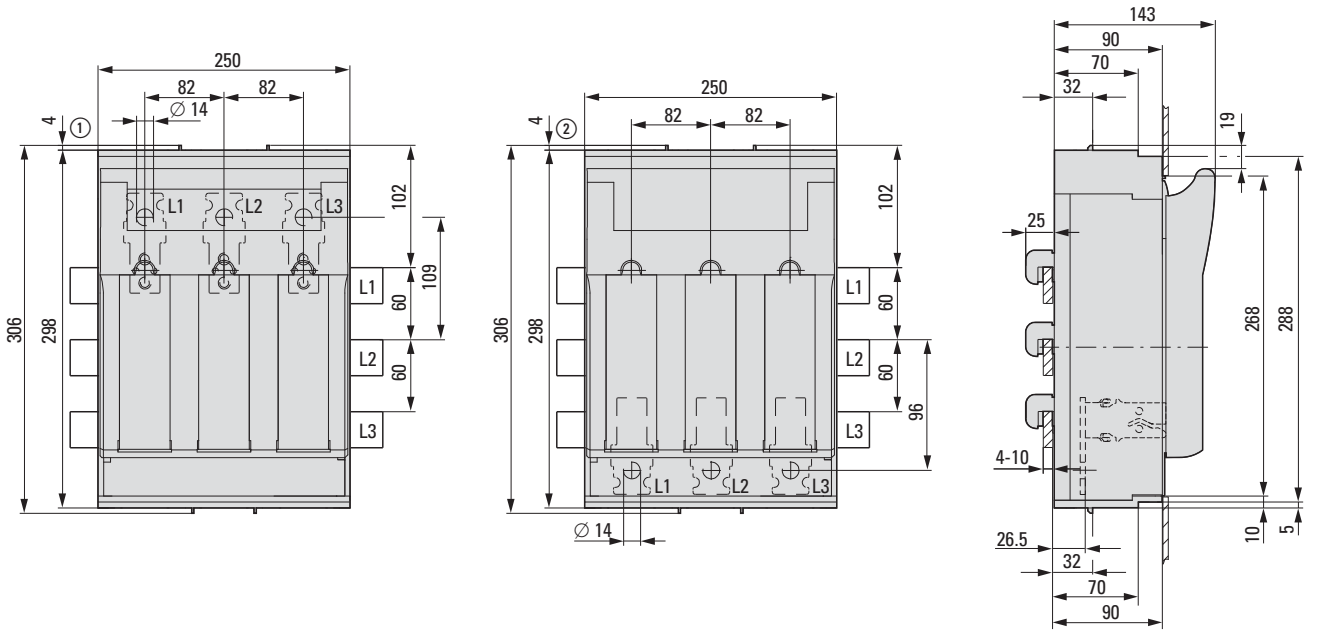

1230DIM-368

XNH3-FCE-S630...

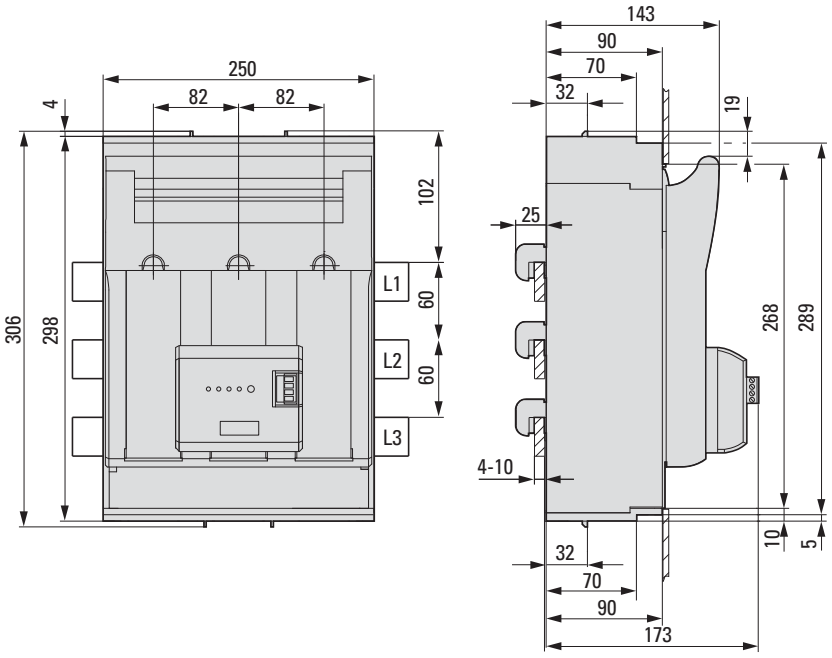

1230DIM-372

SG45812

01063563_0

SG46912

Description

NH-Fuse-Switch-Disconnector LTS-100/C00/3-R:

- For fuse links NH000
- Rated operating current 125 A
- Width only 63 mm, Height 195 mm

Compact NH-Fuse-Switch-Disconnector FCFSDNH000BBC60-3:

- For fuse links NH000
- Rated operating current 125 A
- Width 90 mm, Height 160 mm

NH-Vertical Fuse-Switch-Disconnector NH-SLS-00/160-60:

- For fuse links NH00
- Rated operating current 160 A
- Width 50 mm, Height 455 mm

SASY 60i Busbar System

Fuse Switch Disconnectors LTS, FC, NH-SLS

NH-Fuse-Switch-DisconnectorLTS-100/C00/3-R

- Inclusive shock hazard protection at the top and bottom
- Drill-free mounting
- Max. Fuse-link 500 V: 125 A
- Width only 63 mm
- Utilisation: 20 x 5/10, 30 x 5/10, Double-T

SG45812

Size	I_e (A)	Type of connection	Type Designation	Article No.	Units per package
000	125	Connection at the bottom Lift terminal 1.5 - 50 mm²	LTS-100/C00/3-R	284690	1

Compact NH-Fuse-Switch-Disconnector, FCFSDNH000BBC60-3

- Inclusive shock hazard protection at the top and bottom
- Drill-free mounting
- For mounting onto busbars with distance between busbars 60 mm
- Max. Fuse-link
  500 V: 100 A
  690 V: 100 A
- Width 90 mm
- Utilisation: 12 x 5/10

01063563_0

Size	I_e (A)	Type of connection	Type Designation	Article No.	Units per package
000	100	Connection top or bottom Lift terminal 1.5 - 50 mm²	FCFSDNH000BBC60-3	139533	1

Size	I_e (A)	Type of connection	Type Designation	Article No.	Units per package

NH-Vertical Fuse-Switch-Disconnector NH-SLS-00/160-60

- Inclusive cover for termination space
- Drill-free mounting
- Max. Fuse-link
  400 V: 160 A
  690 V: 160 A (nur with NH-SLS-00/160-60)
- Clamp-type terminals included in the delivery
- 60 mm centre line distance of busbars
- Utilisation: 12 x 5/10, 20 x 5/10, 25 x 5/10, 30 x 5/10, Double-T

SG46912

Without fuse monitoring

00	160	Connection top or bottom	NH-SLS-00/160-60	106211	1/182

With fuse monitoring

00	160	Connection top or bottom	NH-SLS-00/160-60-SI	106216	1/112

Suitable with	Type Designation	Article No.	Units per package

Teminal Cover/Size Compensation for GST...

- For NH-fuse-links Z-NH/00... and solid-links Z-NH-00/TR see chapter Accessories Fuse Devices

wa_sg01712

for NH-SLS-00/160-60	Z-NH-SLS-KA	106223	2

Coordination Table

- Combinations possible without bending the copper busbar

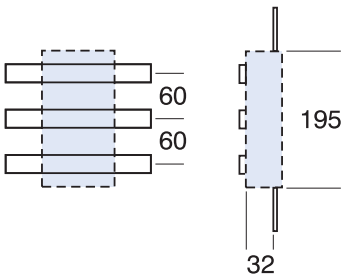

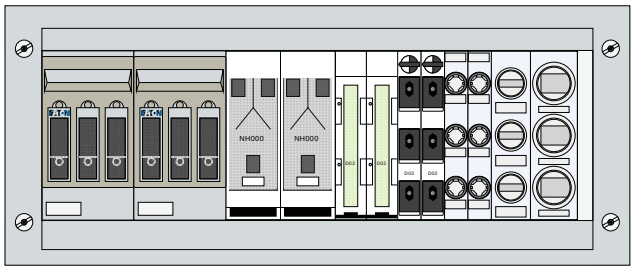

	Device	XNH00-S160	LTS-100/C00/3-R	D02-S/63/3-RS	D02-LTS/63/3-R(-HK)	D02-SO/63/3-R-27 Z-D02/R/3-..	DII-SO/25/3-R(-PS)	DIII-SO/63/3-R(-PS)	AM195
	Accessory	XNH00-KSS-32					SBS-RS60	SBS-RS60	
Cu	12x5/10	X			X	X	X	X	X
	20x5/10	X	X	X	X	X	X	X	X
	25x5/10	X			X	X	X	X	X
	30x5/10	X	X	X	X	X	X	X	X
	Double-T	X	X	X	X	X	X	X	–

SASY 60i Busbar System

Fuse Switch Disconnectors LTS, FC, NH-SLS

Multi-layer Copper Band, insulated

- E-Cu conductor, tinned
- Rated operating voltage 1000 V AC / 1500 V DC
- UL approved for max. 600 V AC
- Insulation resistance 20 kV/mm
- Insulating material heat resistant up to +105 °C
- Self-extinguishing according to UL 94 V0
- 2000 mm long
- Continuous currents according to DIN 43671, see technical data

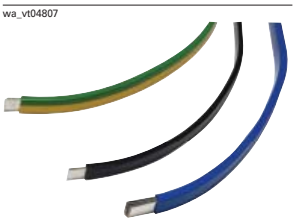

Rated current range[1] A	Dimensions (number of layers x width x thickness for a single layer) mm	Cross-section[2] mm²	Utilisation	Type Designation	Article No.	Units per package
100	3 x 9 x 0.8	21.6	black	CU-BAND3X9X0.8-BK	081167	20
	3 x 9 x 0.8	21.6	blue	CU-BAND3X9X0.8-BU	080960	20
	3 x 9 x 0.8	21.6	green/yellow	CU-BAND3X9X0.8-GNYE	081006	20
160	6 x 9 x 0.8	43.2	black	CU-BAND6X9X0.8-BK	081414	10
	6 x 9 x 0.8	43.2	blue	CU-BAND6X9X0.8-BU	081344	10
	6 x 9 x 0.8	43.2	green/yellow	CU-BAND6X9X0.8-GNYE	081367	10
200	9 x 9 x 0.8	64.8	black	CU-BAND9X9X0.8-BK	081515	10
	9 x 9 x 0.8	64.8	blue	CU-BAND9X9X0.8-BU	081436	10
	9 x 9 x 0.8	64.8	green/yellow	CU-BAND9X9X0.8-GNYE	081485	10
250	6 x 16 x 0.8	74.4	black	CU-BAND6X16X0.8-BK	081310	10
	6 x 16 x 0.8	74.4	blue	CU-BAND6X16X0.8-BU	081222	10
	6 x 16 x 0.8	74.4	green/yellow	CU-BAND6X16X0.8-GNYE	081275	10
400	10 x 16 x 0.8	124	black	CU-BAND10X16X0.8-BK	080739	5
	10 x 16 x 0.8	124	blue	CU-BAND10X16X0.8-BU	079736	5
	10 x 16 x 0.8	124	green/yellow	CU-BAND10X16X0.8-GNYE	080698	5
	5 x 24 x 1	120	black	CU-BAND5X24X1-BK	119032	5
630	11 x 21 x 1	231	black	CU-BAND11X21X1-BK	080923	5
	11 x 21 x 1	231	blue	CU-BAND11X21X1-BU	080769	5
	11 x 21 x 1	231	green/yellow	CU-BAND11X21X1-GNYE	080836	5
	8 x 24 x 1	192	black	CU-BAND8X24X1-BK	119033	5
	10 x 24 x 1	240	black	CU-BAND10X24X1-BK	119034	5
	5 x 32 x 1	160	black	CU-BAND5X32X1-BK	119035	5
800	10 x 32 x 1	320	black	CU-BAND10X32X1-BK	119036	3
1000	10 x 40 x 1	400	black	CU-BAND10X40X1-BK	119037	3
1250	10 x 50 x 1	500	black	CU-BAND10X50X1-BK	119038	2
1600	10 x 80 x 1	800	black	CU-BAND10X80X1-BK	119039	1

Notes [1] Continuous currents according to DIN 43671

[2] Cross-sectional area: Wiring instructions for devices (e.g., minimum terminal capacity of ... mm²) must be given priority

Line Supports

Profile ledge

wa_vt22613

Used for	Type Designation	Article No.	Units per package
Clamp clips	BZ248	076516	10

Clamp clips

wa_vt34013

Used for	Type Designation	Article No.	Units per package
3 x 9 x 0.8 6 x 9 x 0.8	BZ249	078889	10
4 x 16 x 0.8 6 x 16 x 0.8 10 x 16 x 0.8	BZ251	081262	10
11 x 21 x 1	BZ252	083635	10

Short-circuit strength diagrams

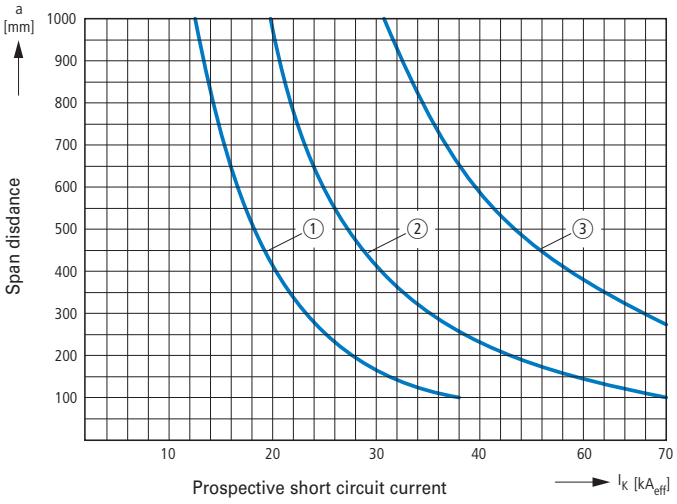

① BZ249
② BZ251
③ BZ252

Technical Data

Replacing NH fuses or any other activities (such as installation, operation etc. …) on NH fuse switch disconnectors may be carried out by electro-technically qualified and specialized staff only. Power-related data provided by the manufacturer, e.g. max. rated make and break capacities, must be taken into account. Non-qualified employees are not authorized to install or operate such products as they cannot foresee the consequences of their actions. General regulations (e.g. safety regulations, protective clothing …) and regional requirements (e.g. for accident prevention on electrical systems and operating resources) must at all times be respected.

		LTS-100/000/3-R	**FCFSDNHOOOBBC60-3**	**NH-SLS-00/160-60**
Standard		IEC/EN 60947-3	IEC/EN 60947-3	IEC/EN 60947-3
NH fuses[1)] according to DIN VDE 0636-2		000	000	00
Rated operational voltage	U_e	500 V AC	690 V AC, 440 V DC	690 V AC
Rated operational current	I_e	125 A	125 A	160 A
Rated frequency	f	40 - 60 Hz	40 - 60 Hz	40 - 60 Hz
Rated insulation voltage	U_i	500 V AC	800 V AC	800 V AC
Total power loss at I_{th} (without fuses)	P_v	18 W	13,8 W	27 W
Power loss at 80% (without fuses)	P_v	14	14.1 W	17,3 W
Rated impulse withstand voltage	U_{imp}	8 kV	6 kV	8 kV
Utilization category		AC-22B (500 V / 125 A)	AC-23B (400 V / 125 A)	AC-23B (400 V / 160 A)
		–	AC-22B (500 V / 125 A)	AC-23B (500 V / 125 A)
		–	AC-21B (690 V / 125 A)	AC-22B (690 V / 160 A)
		DC-22B (220 V / 100 A)	DC-22B (440 V / 63 A)	–
		–	DC-21B (440 V / 125 A)	–
Rated conditional short-circuit current		50 kA (500 V)	50 kA (100 A) (500 V)	50 kA (690 V)
			50 kA (80 A) (690 V)	
Rated short-time withstand current	I_{cw}	–	–	–
Max. permitted power loss per fuse link	P_{NH}	12 W	9 W	12 W
Degree of protection - front (XNH installed)		operating status IP20	operating status IP20	operating status IP20
		handle cover open IP10	handle cover open IP10	handle cover open IP10
Ambient temperature	T_{35}	-25 to +55 °C	-25 to +55 °C	-25 to +55 °C
Rated duty		uninterrupted duty	uninterrupted duty	uninterrupted duty
Activation		dependent manual activation	dependent manual activation	dependent manual activation
Fitting position		vertical	vertical/horizontal	vertical
Altitude		max. 2000 m	max. 2000 m	max. 2000 m
Pollution degree		3	3	3
Overvoltage category		III	III	III
Colour		grey/black	grey	grey
RoHs		yes	yes	yes
Energy feeder direction		bottom	any (FLEX System)	any (FLEX System)
Lockable		–	–	–
Sealable		yes, standard	–	–
Material		Polyamide	Polyamide	Polyamide
Reaction to fire		self-extinguishing according to UL94	self-extinguishing according to UL94	self-extinguishing according to UL94
Halogen-free		yes	yes	yes
Voltage test		–	yes, sliding inspection windows	–
Electrical service life		200 operating cycles	300 operating cycles	200 operating cycles
Mechanical service life		1400 operating cycles	1700 operating cycles	1400 operating cycles
Track resistance		CTI 400	CTI 200	CTI 200
Temperature resistance		up to 125 °C	up to 125 °C	up to 125 °C
Terminal capacities				
Flat connection				
Bolt diameter		–	–	M8
Cable lug max. width		–	–	27 mm
Flat rail		–	–	20x10 mm
Box terminal				
multi-wire		1.5 - 50 mm^2 Cu	1.5 - 50 mm^2 Cu	–
Cu-Band		6x9x0.8 mm	6x9x0.8 mm	–

Note: Please leave a minimum distance to grounded live parts: Side = 20 mm, top = 50 mm.

[1)] Type-tested with NH fuse links of characteristic gG.

Dimensions

LTS-100/C00/3-R

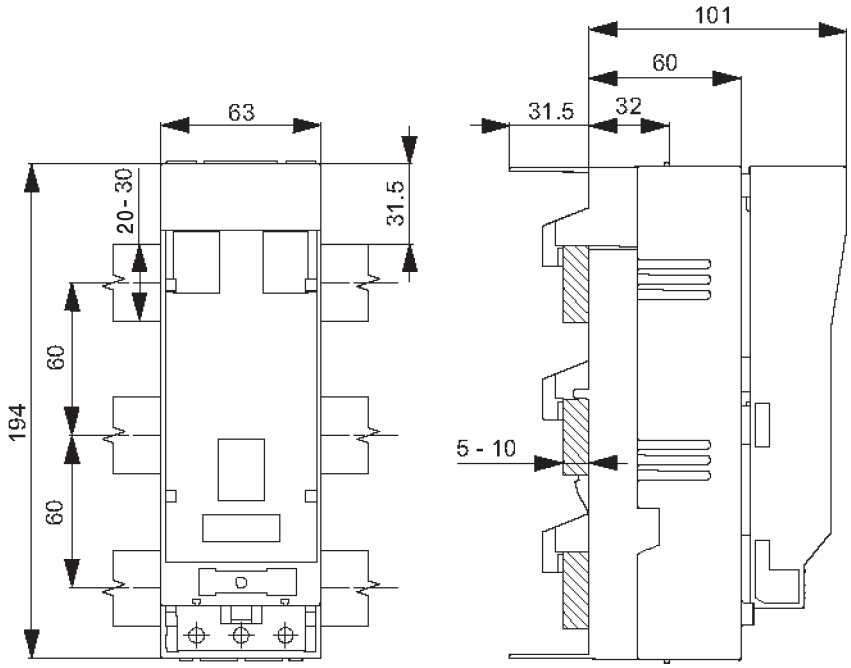

FCFSDNH000BBC60-3

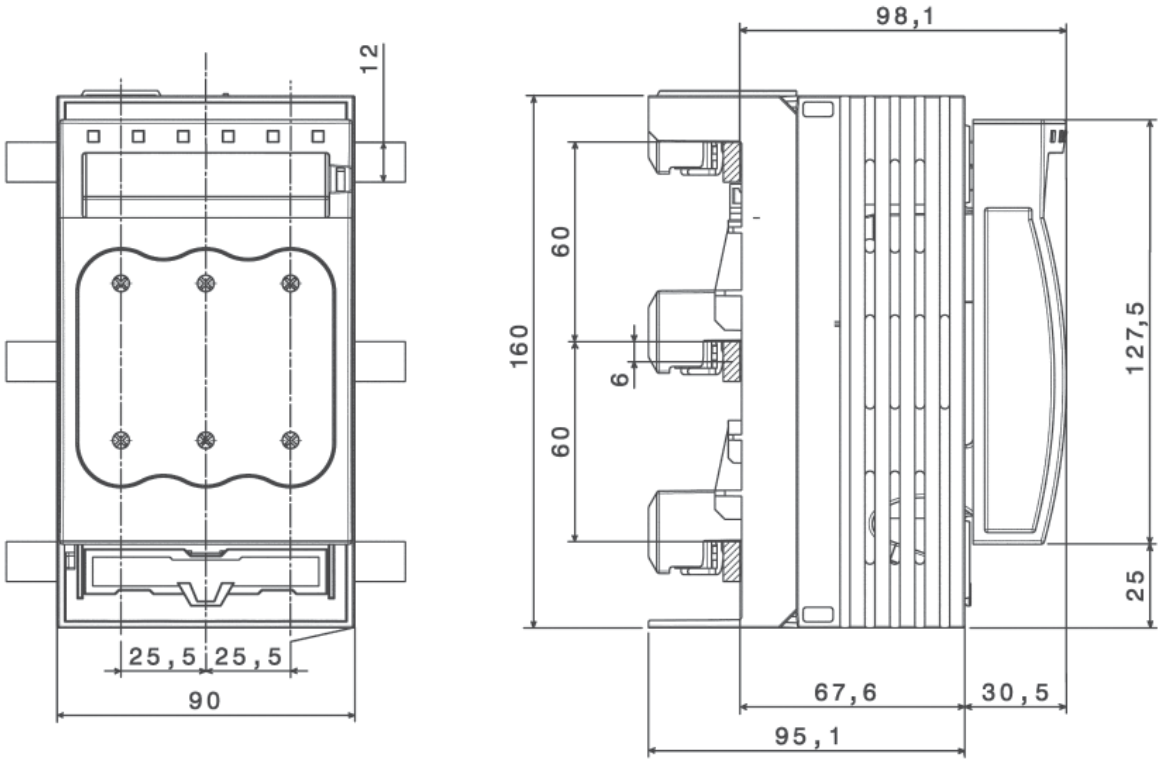

NH-SLS-00/160-60(-SI)

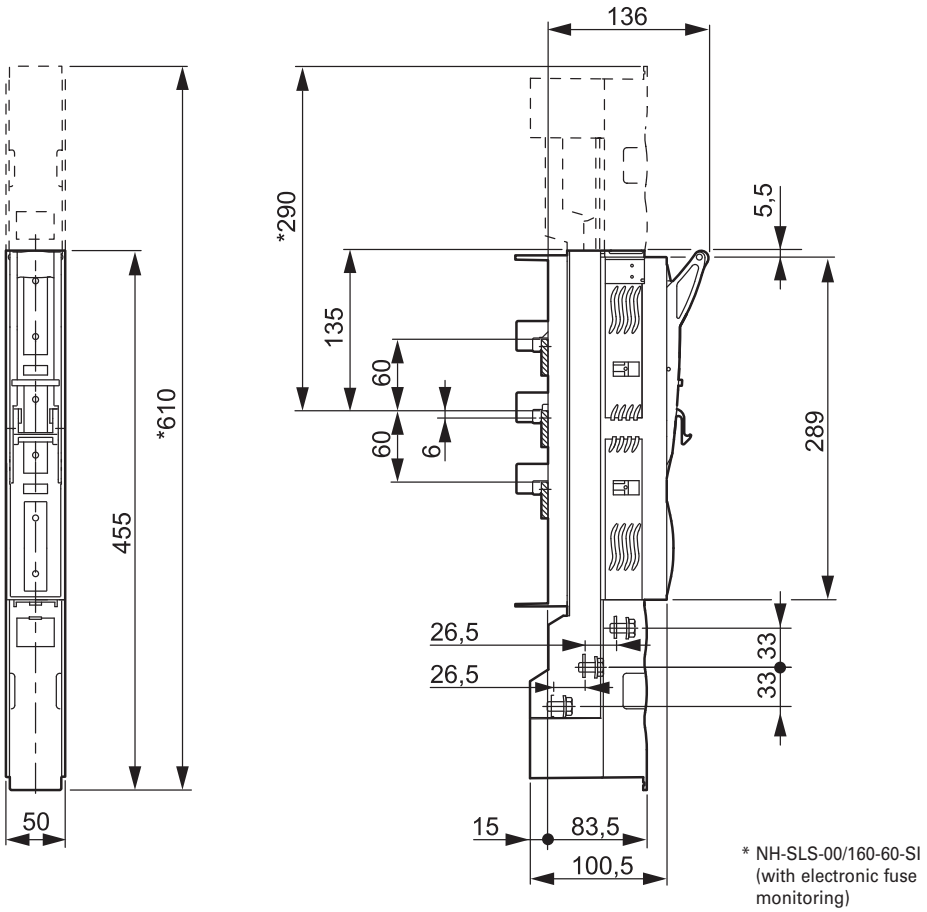

* NH-SLS-00/160-60-SI (with electronic fuse monitoring)

Technical Data Multi-layer Copper Band, insulated, CU-BAND

	CU-BAND
Standards	EN 61439-2 (max. 1000 V AC and 1500 V DC), UL 758 (max. 600 V AC and 750 V DC)
Insulating material	
Heat resistant	up to +105 °C
Self-extinguishing	according to UL 94 V0
Dielectric strength	20 kV/mm
Copper	E-CU, tinned
Operating temperature	-30 °C / +105 °C
Length	2 m
Colors	black (BK), blue (BU), green/yellow (GNYE)
UL File No.	E248096. UL report applies to both US and Canada.

Continuous currents according to DIN 43671 for current rails from E-Cu in indoor facilities at 35 °C air temperature around the conductor and max. X °C busbar temperature.

Rated current range	Dimensions	Cross-section [mm²]	Continuous current AC			Type	Colour
	Number of layers x Width x thickness of a layer [mm]		X = 65 °C	X = 85 °C	X = 105 °C		
			ΔT = 30 K	ΔT = 50 K	ΔT = 70 K		
100 A	3 x 9 x 0.8	21.6	98 A	**130 A**	152 A	CU-BAND3X9X0.8-…	BK, BU, GNYE
160 A	6 x 9 x 0.8	43.2	147 A	**196 A**	228 A	CU-BAND6X9X0.8-...	BK, BU, GNYE
200 A	9 x 9 x 0.8	64.8	179 A	**238 A**	277 A	CU-BAND9X9X0.8-...	BK, BU, GNYE
250 A	6 x 16 x 0.8	74.4	252 A	**335 A**	391 A	CU-BAND6X16X0.8-...	BK, BU, GNYE
400 A	10 x 16 x 0.8	128	330 A	**439 A**	512 A	CU-BAND10X16X0.8-...	BK, BU, GNYE
400 A	5 x 24 x 1	120	369 A	**491 A**	572 A	CU-BAND5X24X1-...	BK
630 A	11 x 21 x 1	231	563 A	**749 A**	873 A	CU-BAND11X21X1-...	BK, BU, GNYE
630 A	8 x 24 x 1	192	483 A	**642 A**	749 A	CU-BAND8X24X1-...	BK
630 A	10 x 24 x 1	240	559 A	**743 A**	866 A	CU-BAND10X24X1-...	BK
630 A	5 x 32 x 1	160	477 A	**634 A**	739 A	CU-BAND5X32X1-...	BK
800 A	10 x 32 x 1	320	721 A	**959 A**	1118 A	CU-BAND10X32X1-...	BK
1000 A	10 x 40 x 1	400	850 A	**1131 A**	1318 A	CU-BAND10X40X1-...	BK
1250 A	10 x 50 x 1	500	1020 A	**1357 A**	1581 A	CU-BAND10X50X1-...	BK
1600 A	10 x 80 x 1	800	1500 A	**1995 A**	2325 A	CU-BAND10X80X1-...	BK

The rated currents and wiring instructions for devices (e.g. connection cross-section at least ... mm²) are primarily to be observed.
Multiplication factor 1.72 using 2x CU-BAND in parallel.
Multiplication factor 2.25 when using 3x CU-BAND in parallel arrangement according to DIN 43671.

Dimensions

Line Supports BZ

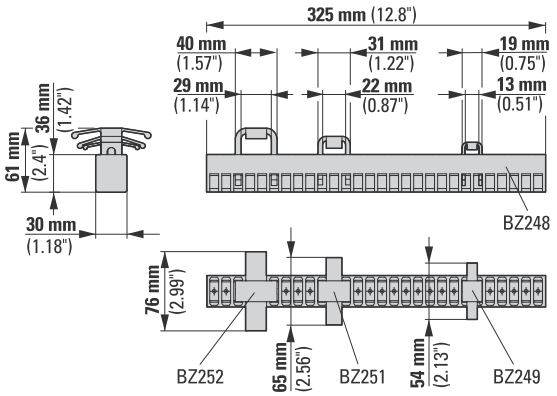

Eaton is a power management company with 2017 sales of $20.4 billion. We provide energy-efficient solutions that help our customers effectively manage electrical, hydraulic and mechanical power more efficiently, safely and sustainably. Eaton is dedicated to improving the quality of life and the environment through the use of power management technologies and services. Eaton has approximately 96,000 employees and sells products to customers in more than 175 countries.

For more information, visit **Eaton.com.**

To contact an Eaton salesperson
or local distributor/agent, please visit
www.eaton.eu/electrical/customersupport

Eaton Industries (Austria) GmbH
Scheydgasse 42
1210 Vienna
Austria

Eaton
EMEA Headquarters
Route de la Longeraie 7
1110 Morges, Switzerland
Eaton.eu

© 2018 Eaton
All Rights Reserved
Printed in Austria
Publication No. FK4300-1167 GB
Article number 111003-MK
February 2018
Grafics: SRA, Schrems

Changes to the products, to the information contained in this document, and to prices are reserved; so are errors and omissions. Only order confirmations and technical documentation by Eaton is binding. Photos and pictures also do not warrant a specific layout or functionality. Their use in whatever form is subject to prior approval by Eaton. The same applies to Trademarks (especially Eaton, Moeller, and Cutler-Hammer). The Terms and Conditions of Eaton apply, as referenced on Eaton Internet pages and Eaton order confirmations.

Eaton is a registered trademark.

All other trademarks are property of their respective owners.

Follow us on social media to get the latest product and support information.

4015081105755

Powering Business Worldwide